HUAXIN® FOUNTAIN

- Creative Team Of Fountains Design
- Strong R&D And Production Capacity
- Rich Projects Construction Experience
- International Standardization

CONTACT US

TEL/WHATSAPP: +86 18816238859
EMAIL: sales@huaxinfountains.com
WEBSITE: www.huaxinfountain.com

BUSINESS BROCHURE

FOCUS ON WATER SHOW PROJECTS

HUAXIN FOUNTAIN

HUAXIN® FOUNTAIN

ABOUT US

Neijiang Huaxin Art Fountain Factory is a comprehensive fountain enterprise. Our business includes the research and development of fountain equipment, the design and installation of water show projects, and the operation and maintenance of fountain projects, etc.

With 20 years of experience in more than 400 fountain projects, the team of Huaxin combined water, fire, light, shadow, sound, and color wonderfully, we have created landmarks and landscapes one after another with our clients together. We have passed the IS09001 quality management system and D-U-N-S factory certification. Now holds 18 national-level utility patents. Products have passed CE, RoHS, SABER certification, etc. We have serviced more than 400 projects in 50 countries.

We began in fountain equipment manufacturing but what we do today goes well beyond - from customized fountain equipment production to fountain design and build. Since 2008, we have been prosing fountain services for clients all over the world, today Huaxin Fountain is a proven innovator in both domestic and global markets. Our services cover fountain design, customized manufacturing, installation, technical support, and project maintenance, Being committed to the concept of "working outside the box" Huaxin Fountain is providing fountain build and design services to all kinds of fountain settings ranging from commercial to governmental and from private to public. We work closely with clients to realize our common vision.

SERVICE PROCESS

Design

Manufacture

Installation

Maintenance

DUNS Registered TM Supplier Capability Evaluation (Manufacturing)

dun&bradstreet

Summary

Company Overview	
Company Name	Neijiang Huaxin Art Fountain Factory
Start Year	2008
Employee Size	32(Here)
Registered Capital	RMB 5,000,000
Current Shareholder	Wei Liu(100%)
Original Capital	-
Original Shareholder	Chuntao Zhou(100%)

Credit Risk

According to its financial capacity and credit condition, subject was rated a D&B Rating of **3A3**. Risk Index was rated at EMMA Score **6**, which means Below the Average Risk. Subject was rated a Paydex of **85**, indicating it pays its suppliers 10 days sooner than terms .

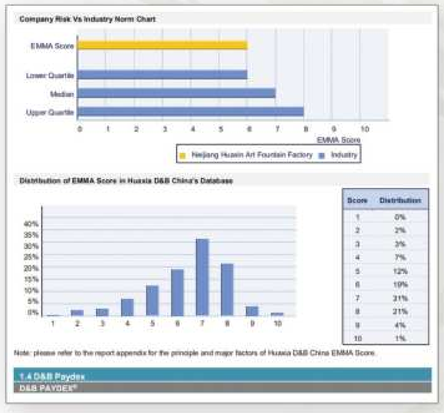

Company Risk Vs Industry Norm Chart

Distribution of EMMA Score in Huaxia D&B China's Database

Score	Distribution
1	0%
2	2%
3	3%
4	7%
5	12%
6	19%
7	21%
8	21%
9	4%
10	1%

Note: please refer to the report appendix for the principle and major factors of Huaxia D&B China EMMA Score

1.4 D&B Paydex

D&B PAYDEX®

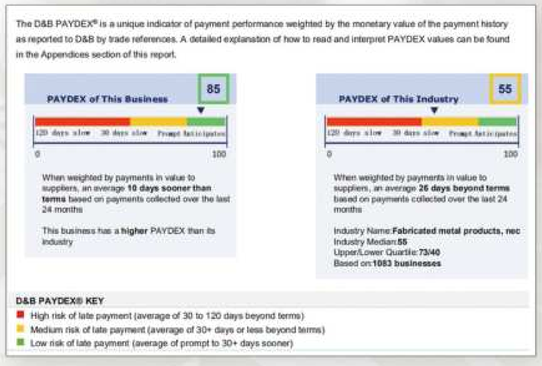

The D&B PAYDEX® is a unique indicator of payment performance weighted by the monetary value of the payment history as reported to D&B by trade references. A detailed explanation of how to read and interpret PAYDEX values can be found in the Appendices section of this report.

PAYDEX of This Business: 85

120 days slow | 30 days slow | Prompt Participation

0 — 100

When weighted by payments in value to suppliers, an average **10 days sooner than terms** based on payments collected over the last 24 months

This business has a **higher** PAYDEX than its industry

PAYDEX of This Industry: 55

120 days slow | 30 days slow | Prompt Participation

0 — 100

When weighted by payments in value to suppliers, an average **26 days beyond terms** based on payments collected over the last 24 months

Industry Name:**Fabricated metal products, nec**
Industry Median:**55**
Upper/Lower Quartile:**73/40**
Based on:**1083 businesses**

D&B PAYDEX® KEY

- High risk of late payment (average of 30 to 120 days beyond terms)
- Medium risk of late payment (average of 30+ days or less beyond terms)
- Low risk of late payment (average of prompt to 30+ days sooner)

< HUAXIN **CE RoHs** Certificates >

Supplier Assessment

Supplier Assessment Certificate

Neijiang Huaxin Art Fountain Factory

CERTIFICATION EUROPE

Certificate of Registration

Neijiang Huaxin Art Fountain Factory

ISO9001:2015

TMC

Certificate of Compliance

RoHS DIRECTIVE 2011/65/EU

Alibaba.com Assessed Supplier

Neijiang Huaxin Art Fountain Factory

SGS

TMC

Certificate of Conformity

LVD DIRECTIVE 2014/35/EU

TMC

Certificate of Compliance

RoHS DIRECTIVE 2011/65/EU

TMC

Certificate of Conformity

LVD DIRECTIVE 2014/35/EU

< Huaxin Qualification Documents >

< AAA Certificates >

< Patent Certificates & Business License>

DIRECTORY

PROJECT CASES

01 Blvd Ruh City Dancing Fountain Project In Riyadh, Saudi Arabia

PROJECT ADDRESS: Riyadh, KSA
PROJECT OVERVIEW: The installation area of the fountain is about 750 square meters.
PROJECT SCALE: Including digital swing device, straight-up jets, running jets, changeable jets, swing head light show, sound reinforcement system, and control system.
DESIGN AND INSTALLATION METHOD: Pool fountain.

02 Jeddah Season 2022 City Walk Fountain Project In Jeddah, KSA

PROJECT ADDRESS: Jeddah, Saudi Arabia
PROJECT OVERVIEW: The installation area of the fountain is about 500 square meters.
PROJECT SCALE: Including digital swing device, flaming fountains, straight-up jets, rotate basket, running jets, changeable jets, swing head light show, sound reinforcement system, and control system.
DESIGN AND INSTALLATION METHOD: Pool fountain.

PROJECT CASES

03 Dry Deck Fountain at Lenin Square, Baikonur, Kazakhstan

PROJECT ADDRESS: Baikonur, Kazakhstan
PROJECT OVERVIEW: For this project, we designed and constructed a large fountain measuring 40 by 20 meters, equipped with a variety of nozzles, including high spray jets, 1D nozzles, variable nozzles, crown nozzles, and running nozzles, as well as a DMX lighting system.
PROJECT SCALE: 40m*20m
DESIGN AND INSTALLATION METHOD: Dry fountain.

04 Dancing Water Fountain Project In Lahore, Pakistan

PROJECT ADDRESS: Bismillah Housing Scheme Phase-2, Lahore, Pakistan
PROJECT OVERVIEW: Completed in February 2023. The fountain size is 52*20 meters, including central high jet, rainbow jets, 1D jets, vice jets, peacock jets, straight-up jets, running jets, DMX lights, water pumps, audio system, control system
DESIGN AND INSTALLATION METHOD: Pool fountain.

PROJECT CASES

05 120*10 Meters Dancing Fountain Project In Erbil, Iraq

PROJECT ADDRESS: Erbil, Iraq
PROJECT OVERVIEW: 120*10 Meters.
PROJECT SCALE: Including digital swing device, straight-up jets, rotate basket, running jets, inward arching jets, laser show, sound reinforcement system, water treatment system, and control system.
DESIGN AND INSTALLATION METHOD: Pool fountain.

06 The Office Garden Dancing Fountain In Al Khobar, KSA

PROJECT ADDRESS: Al Khobar,KSA
PROJECT OVERVIEW: Irregular shaped pool,125*14M
PROJECT SCALE: Including 2D swing equipment, running fountains, foam nozzles, geyser nozzles, lighting system, sound system, fountain control system.
DESIGN AND INSTALLATION METHOD: Pool fountain & Dry fountain

PROJECT CASES

07 Ring Fountain Project In People ' s Square Of Egypt ' s New Capital

PROJECT ADDRESS: New Administrative Capital, Egypt
PROJECT OVERVIEW: The project is located in People' s Square, the New Administrative Capital of Egypt. The fountain is arranged in a ring around the world's tallest flagpole. This project mainly uses 2D swing equipment, Running Jets, Laminar Flow Jets, Peacock Shape Jets, Rotation Swing Flower Shape Jets, Air Explosion Jets, and so on.
PROJECT SCALE: 1600 ㎡.
DESIGN AND INSTALLATION METHOD: Pool fountain.

08 Musical Dancing Fountain At Red Castle In Tripoli Libya

PROJECT ADDRESS: Tripoli, Libya
PROJECT OVERVIEW: The 100-meter-long dancing fountain at the Red Citadel in Tripoli combines 1D and 2D swing devices, air explosion fountains, variable fountain nozzles, laser effects, DMX512 underwater lighting, and so on. As the largest musical dancing fountain in North Africa, it delivers a breathtaking spectacle and serves as a new cultural landmark of the city.
PROJECT SCALE: 100m*10m.
DESIGN AND INSTALLATION METHOD: Seawater Fountain.

PROJECT CASES

09 31m Diameter Musical Dancing Fountain at Furat Mall, Najaf, Iraq

PROJECT ADDRESS: Furat Mall, Najaf, Iraq
PROJECT OVERVIEW: The circular dancing fountain at Furat Mall in Najaf, Iraq, spans 31 meters in diameter and is composed of eight concentric layers: the swinging spotlight layer, finger nozzle layer, running fountain layers (2), variable nozzle layer, flame fountain layer, 2D swinging fountain layer, and the central main jet.
PROJECT SCALE: Dia. 31 m.
DESIGN AND INSTALLATION METHOD: Pool fountain.

10 The Yilan International Children's Folklore & Folkgame Festival Water Show In Taiwan

PROJECT ADDRESS: Yilan County, Taiwan
PROJECT OVERVIEW: The laser and water show in Yilan County, Taiwan, was specially created for the 2024 Yilan International Children' s Folklore & Folkgames Festival. The show combines swing laser lights, running fountains, 1D & 2D swing fountains, flame fountains, and rotating flower basket fountains, delivering a spectacular visual experience that has greatly enhanced Yilan' s nighttime tourism.
DESIGN AND INSTALLATION METHOD: Pool & Floor fountain.

1D Multi-Directional Drive (Regular version)

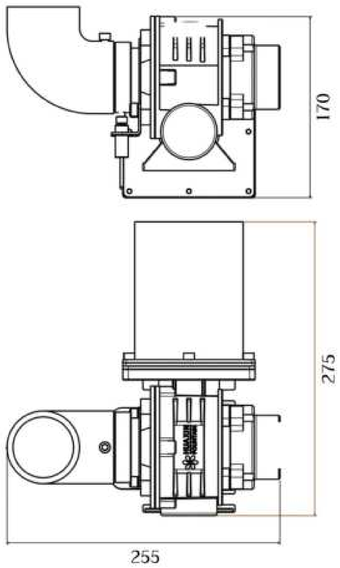

Technical Parameter

Material	Stainless Steel 304
Diameter (DN)	DN50
Size (mm)	L275*W255*H170
Total Weight	12kg
Reduction Ratio	1:10
Working Voltage Of Motor	AC55V-70V
Lift	10-15m
The Power Of The Motor	200W
The Number Of Phases Of The Motor	Two Phase
The Maximum Torque	85(N.M)
Sensor Voltage	DC24V
Sensor Line Color Separation	Brown-24v Blue-Gnd Black-Return To Zero Signal
Motor Line Color Separation	Red-A+ Green-A- Yellow-B+ Black-B-
Recommended Motor Mounting Cables	JHS 4*2.5mm²
Recommended Sensor Mounting Cable	PVVP 3*1.5mm²

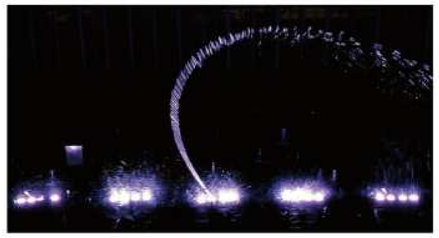

CNC FOUNTAIN EQUIPMENT

1D Multi-Directional Drive (Upgraded version)

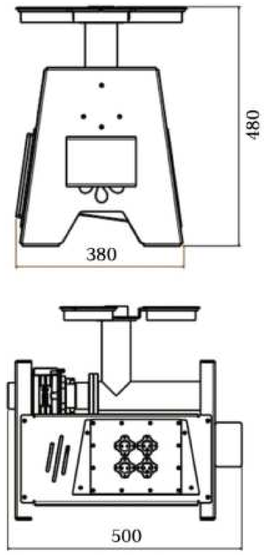

Technical Parameter

Material	Stainless Steel 304
Diameter (DN)	DN50
Size (mm)	L380*W480*H500
Total Weight	37.5kg
Reduction Ratio	1:10
Working Voltage Of Motor	DC60V-90V
Lift	8-15m
Motor Power	200W
Operating Angle	±60°
The Maximum Torque	85(N.M)
Sensor Voltage	DC24V
Recommended Working Cables	JHS 2*6mm²
Recommended Control Cable	PVVP 3*1.5mm²
Lighting Configuration	HX130GM-DC24V-DMX512 RGB-9W*3

2D Multi-Directional Drive (Regular version)

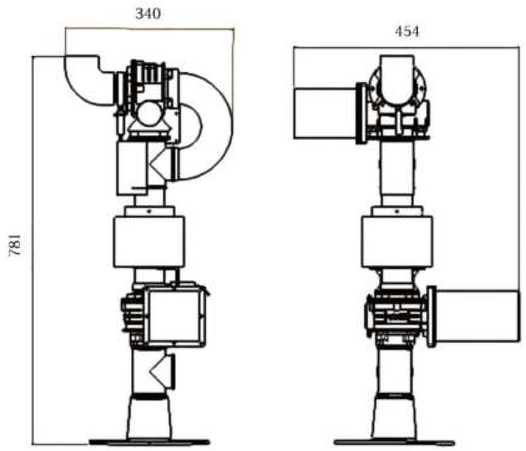

Technical Parameter

Material	Stainless Steel 304
Nozzle Diameter (mm)	DN50
Length*Width*Height (mm)	L454*W340*H781
Net Weight (Kg)	39.7
Upper Dimension Reduction Ratio	1:10
Lower Dimension Reduction Ratio	1:10
Motor Working Voltage	AC55V-70V
Motor Power	500W
Lift	40
Number Of Phases Of Motor	Two Phases
Upper Maximum Torque	85(N.M)
Lower Maximum Torque	120(N.M)
Sensor Voltage	DC24V
Upper (Lower) Dimensional Sensor Line Color Separation	Brown-24v Blue-Gnd Yellow-Return To Zero Signal
Upper (Lower) Dimensional Stepper Motor Line Color Separation	Red-A+ Green-A- Yellow-B+ Black-B-
Recommended Stepper Motor Mounting Cables	JHS 4*2.5mm²x2
Recommended Sensor Mounting Cable	PVVP 3*1.0mm²x2
Number Of Slip Ring Lines	7

CNC FOUNTAIN EQUIPMENT

2D Multi-Directional Drive (DMX512)

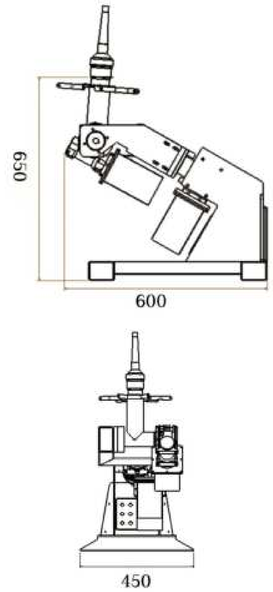

Material	Stainless Steel 304
Nozzle Diameter (mm)	DN50
Length*Width*Height (mm)	L600*W450*H650
Net Weight (Kg)	56.5
Upper Dimension Reduction Ratio	1:10
Lower Dimension Reduction Ratio	1:10
Stepping Motor Working Voltage	DC60V-90V
Motor Power	250W/200W
Water Spray Height	8-15m
Number Of Phases Of Stepper Motor	Two Phases
Upper Maximum Torque	85(N.M)
Lower Maximum Torque	120(N.M)
Sensor Voltage	DC24V
Recommended Working Cables	JHS 2*6mm²
Recommended Control Cables	PVVP 3*1.5mm²
Running Direction (up dimension)	+100°, -35°
Running Direction (down dimension)	±65°
Lighting Configuration	HX130GM-DC24V-3*9W-DMX512 RGB

2D Multi-Directional Drive (Built-in conductive slip ring)

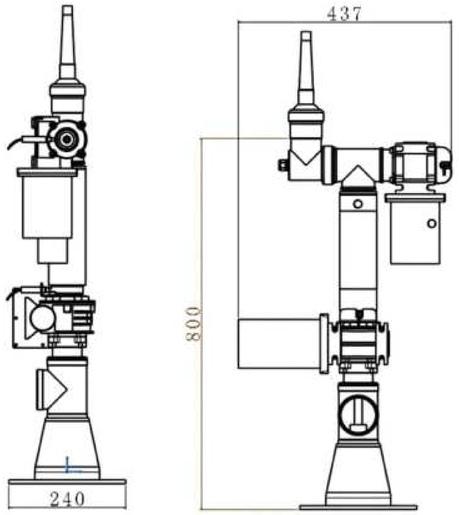

Material	Stainless Steel 304
Water Inlet Diameter	DN65
Nozzle Diameter	DN50
Length*Width*Height (mm)	L240*W437*H800
Net Weight (Kg)	33.7
Upper Dimension Reduction Ratio	1:10
Lower Dimension Reduction Ratio	1:10
Motor Working Voltage	AC55V-70V
Motor Power	500W
Number Of Phases Of Motor	Two Phases
Upper Maximum Torque	85(N.M)
Lower Maximum Torque	120(N.M)
Sensor Voltage	DC24V
Upper (Lower) Dimensional Sensor Line Color Separation	Brown-24v Blue-Gnd Yellow-Return To Zero Signal
Upper (Lower) Dimensional Motor Line Color Separation	Red-A+ Green-A- Yellow-B+ Black-B-
Recommended Motor Mounting Cables	JHS 4*2.5mm²x2
Recommended Sensor Mounting Cable	PVVP 3*1.5mm²x2
Number Of Built-In Slip Ring Lines	7
Running Angle	360°

CNC FOUNTAIN EQUIPMENT

Rotating Flower Basket Nozzle

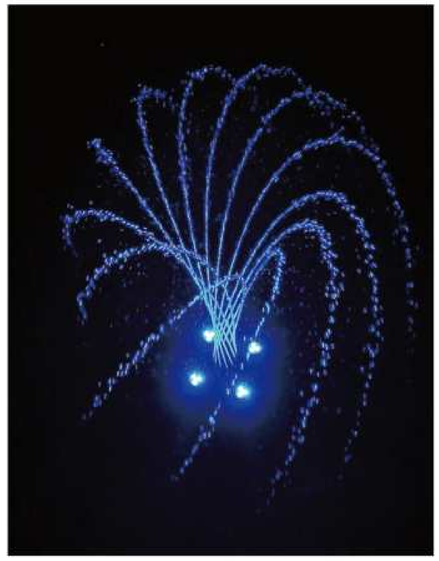

Technical Parameter

Material	Stainless Steel 304
Through Hole Diameter	DN50
Movement Form	360° Rotation
Carrying Medium	Water
Input Pulse Ratio	Pulse/rev 400-25000
Reducer Speed Ratio	1:10
Equipment Weight(Kg)	46
Equipment Size	600*600*611
Package	Wooden Box
Operating Environment Temperature	0—40°
Water Temperature	0—40°
Voltage	70±10%VAC
Control Method	Digital Pulse
Protection Level	IP68
Insulation Level	B
Water Outlet Diameter	Ø6*12
Lamp	HX130GM-AC24V-3*3W/ RGB
Can It Be Trampled?	No
Flow	25
Lift	12

CNC Variable Nozzle (Regular version)

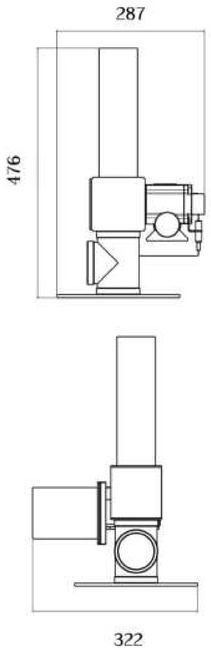

Technical Parameter

Material	Stainless Steel 304
Nozzle Diameter (mm)	DN50
Weight (kg)	17.8
Length*Width*Height (mm)	322*287*476
Water Spray Height (M)	8
Reduction Ratio	1:10
Motor Operating Voltage	AC55V-70V
Motor Power	200W
Motor Phase Number	Two Phases
Maximum Torque	85(N.M)
Sensor Voltage	DC24V
Sensor Line Color Separation	Brown-24V Blue-GND Black-Return to zero signal
Motor Wire Color Separation	Red-A+ Green-A- Yellow-B+ Black-B-
Recommended Motor Mounting Cables	JHS 4*2.5mm²
Recommended Sensor Installation Cables	PVVP 3*1.5mm²
Water Spray Range (M)	4

CNC FOUNTAIN EQUIPMENT

Variable Nozzle (DMX512)

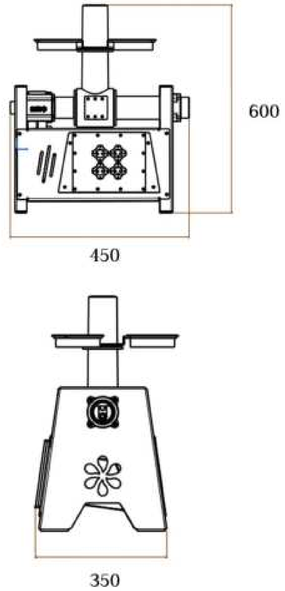

Technical Parameter

Material	Stainless Steel 304
Inlet And Outlet Connection Size	DN50
Weight (kg)	35.5
Length*Width*Height (mm)	350*450*600
Water Spray Height (M)	8-15
Reduction Ratio	1:10
Motor Operating Voltage	AC60V-90V
Motor Power	200W
Motor Phase Number	Two Phases
Maximum Torque	85(N.M)
Sensor Voltage	DC24V
Water Spray Range	8m
Flow (m³/h)	8.5
Recommended Working Cables	JHS 2*6mm²
Recommended Control Cables	PVVP 3*1.5mm²
Water Inlet Diameter	DN50
Lighting Configuration	HX130GM-DC24V-3*9W-DMX512 RGB

Tai Chi Fountain Equipment

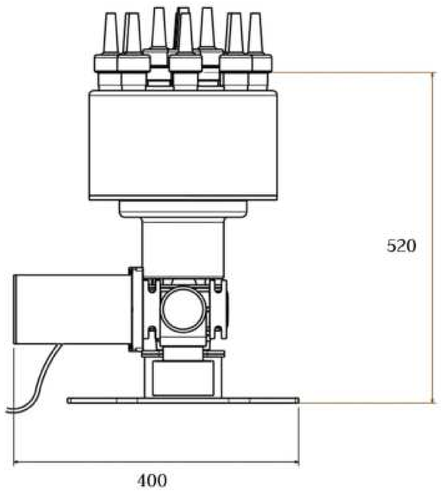

Technical Parameter

Material	Stainless Steel 304
Outlet Connection Size	DN25
Weight (kg)	43.8
Length*Width*Height (mm)	340*400*520
Water Spray Height (M)	8-15
Reduction Ratio	1:10
Motor Operating Voltage	AC55V-70V/DC60-90V
Motor Power	250W
Motor Phase Number	Two Phases
Equipment Torque	120 (N.M)
Recommended Motor Mounting Cables	JHS 4*2.5mm²
Running Direction	360-degree operation in both forward and reverse directions

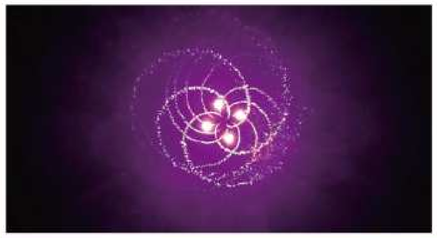

CNC FOUNTAIN EQUIPMENT

Integrated Dry Fountain Device

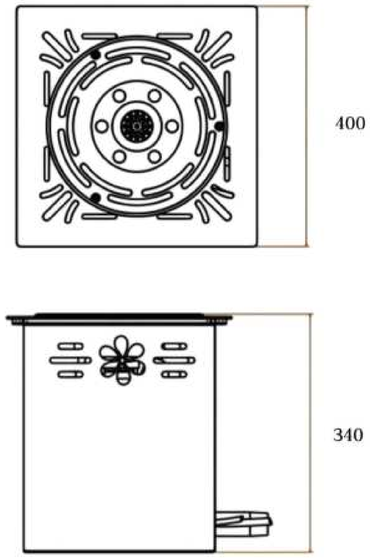

Technical Parameter

Material	Stainless Steel 304
Water Outlet	Φ5*13
Weight (kg)	20
Length*Width*Height (mm)	L400*W400*H340
Pump Power Supply	DC24V
Power	550W
Spray Height	0.3-3m
Power Cable	JHS 2*6mm²
Control Cable	JHSP 3*1.5mm²
Light Voltage	DC24V
Lighting Configuration	HX240GMKH-12*1W-DMX512 RGB

Air Explosion Fountain Device

Technical Parameter

Model	PG15	PG20	PG30	PG40	PG50	PG70
Material	SUS304	SUS304	SUS304	SUS304	SUS304	SUS304
Dimensions (mm)	580*325 *880	580*330 *1110	580*330 *1200	580*330 *1350	860*430 *1670	1410*720 *1980
Weight (kg)	40.6	49	51	53.3	98	243
Spray Height (m)	15-16	20-22	30-33	40-42	50-55	70-78
Nozzle Diameter (mm)	31	31	31	31	31	47
Air Intake Diameter	DN25	DN25	DN25	DN25	DN40	DN40
Standard Pressure (mpa)	0.6	0.8	0.8	0.8	1.0	1.2

Equipment Exhibition

Effect

CNC FOUNTAIN EQUIPMENT

Flaming Fountain Device (oil)

Equipment Exhibition

Effect

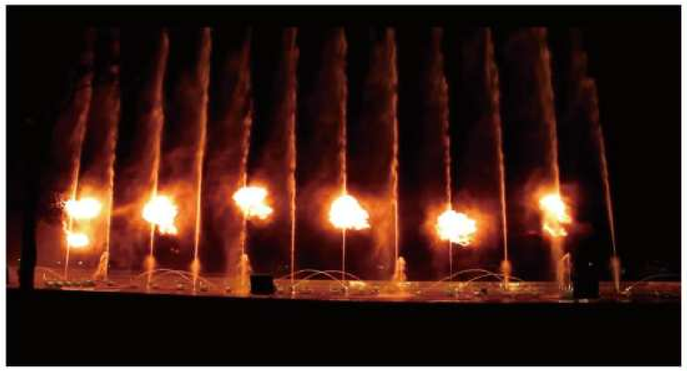

Technical Parameter

Fuel	Oil
Material	304 stainless steel
Size (mm)	600*280*810
Weight (KG)	23.5
Input Voltage (V)	220
Current (A)	2.5
Power (W)	550
Maximum Spray Height (m)	10
Nozzle Diameter (mm)	2.5
Pipe Material	304 stainless steel (seamless steel pipe)
Pipe Size	Main pipe size is determined by site conditions

Flaming Fountain Device (gas)

Equipment Exhibition

Effect

Technical Parameter

Fuel	Gas
Material	304 stainless steel
Size (mm)	Φ350*900
Weight (KG)	15
Input Voltage (V)	220
Current (A)	2.5
Power (W)	550
Maximum Spray Height (m)	3
Nozzle Diameter (mm)	8
Pipe Material	304 stainless steel (seamless steel pipe)
Pipe Size	Main pipe size is determined by site conditions

CNC FOUNTAIN EQUIPMENT

Water And Flame Mixing Fountain Device

Equipment Exhibition

Effect

Technical Parameter

Fuel	Gas
Material	304 stainless steel
Size (mm)	605*315*900
Weight (KG) (without water pump)	23.8
Ignition Coil Voltage (V)	220
Ignition Coil Current (A)	1.4
Ignition Coil Power (W)	300
Gas Supply Solenoid Valve Voltage (V)	200
Gas Supply Solenoid Valve Current (A)	0.2
Gas Supply Solenoid Valve Power (W)	50
Supply Solenoid Valve Maximum Pressure (mpa)	0.8
Pump Voltage (V)	380
Spray Height (m)	3-6
Pipe Material	304 stainless steel (seamless steel pipe)

Laminar Fountain Jets (Regular version)

Technical Parameter

Model	S	M	L	XL
Material	SUS304	SUS304	SUS304	SUS304
Net Weight (KG)	7	12.6	17.4	23.3
Rectifier Barrel Size (mm)	L220*W200*H300	L270*W260*H380	L320*W310*H480	L400*W370*H500
Water Outlet (mm)	10	14	16	18
Water Inlet Diameter	DN25	DN40	DN40	DN40
Flow Rate (M3/H)	3	4	5	7
Lift (m)	4	10	12	14
Span (m)	2.2	3.2	4.7	5.5
Spray Height (m)	2.0	2.2	2.8	3.0
Standard Built-in Light	3W/Monochrome	3W/Monochrome	3W/Monochrome	3W/Monochrome

Laminar Fountain Jets (Underwater installation)

Technical Parameter

Model	S	M	L	XL
Material	SUS304	SUS304	SUS304	SUS304
Net Weight (KG)	7.5	13.0	18.0	24.5
Rectifier Barrel Size (mm)	L220*W200*H500	L270*W260*H580	L320*W310*H680	L400*W370*H700
Water Outlet (mm)	10	14	16	18
Water Inlet Diameter	DN25	DN40	DN40	DN40
Flow Rate (M3/H)	3	4	5	7
Lift (m)	4	10	12	14
Span (m)	1.9	2.8	4.1	5.2
Spray Height (m)	1.7	1.9	2.5	2.7
Standard Built-in Light	3W/Monochrome	3W/Monochrome	3W/Monochrome	3W/Monochrome

CNC FOUNTAIN EQUIPMENT

Jumping Fountain Jets (Regular version)

Technical Parameter

Model	S	M	L	XL
Material	SUS304	SUS304	SUS304	SUS304
Net Weight (KG)	11	17.1	23.8	31.0
Equipment Size (mm)	L240*W220*H430	L260*W240*H550	L320*W340*H630	L360*W400*H670
Water Outlet (mm)	10	14	16	18
Water Inlet Diameter	DN25	DN40	DN40	DN40
Flow Rate (M3/H)	3	4	5	7
Lift (m)	4	10	12	14
Span (m)	2.0	3.0	4.7	5.5
Spray Height (m)	2.0	2.2	2.8	3.0
Standard Built-in Light	3W/Monochrome	3W/Monochrome	3W/Monochrome	3W/Monochrome
Operating Angle	±30°	±30°	±30°	±30°

Jumping Fountain Jets (Underwater installation)

Technical Parameter

Model	S	M	L	XL
Material	SUS304	SUS304	SUS304	SUS304
Equipment Size (mm)	Customizable	Customizable	Customizable	Customizable
Water Outlet (mm)	10	14	16	18
Water Inlet Diameter	DN25	DN40	DN40	DN40
Flow Rate (M3/H)	3	4	5	7
Lift (m)	4	10	12	14
Span (m)	1.7	2.7	4.2	5.0
Spray Height (m)	1.6	1.8	2.4	2.8
Standard Built-in Light	3W/Monochrome	3W/Monochrome	3W/Monochrome	3W/Monochrome
Operating Angle	±30°	±30°	±30°	±30°


Material	304 Stainless Steel				
Model	Connection Size	Pressure (kpa)	Water Spray Volume (m3/h)	Spray Height (m)	Cover Diameter (m)
HXCFN-SS001	DN15	15-65	0.3-1.5	1.0-4.0	Ray
HXCFN-SS002	DN20	15-80	1.0-3.0	1.0-5.0	Ray
HXCFN-SS003	DN25	50-100	2.0-4.0	3.0-6.0	Ray
HXCFN-SS004	DN40	50-150	3.0-6.0	3.0-7.0	Ray
HXCFN-SS005	DN50	50-200	5.0-8.0	3.0-8.0	Ray
HXCFN-SS006	DN65	70-250	10.0-25.0	3.5-15.0	Ray
HXCFN-SS007	DN80	70-330	10.0-40.0	3.5-20.0	Ray
HXCFN-SS008	DN100	80-400	10.0-60.0	3.5-25.0	Ray


Material	304 Stainless Steel				
Model	Connection Size	Pressure (kpa)	Water Spray Volume (m3/h)	Spray Height (m)	Cover Diameter (m)
HXCFN-SS009	DN25	70	21.0	3.5	1.3
HXCFN-SS010	DN40	100	29.0	6.9	2.8
HXCFN-SS011	DN50	180	38.0	7.5	3.1
HXCFN-SS012	DN65	240	47.0	10.0	3.3
HXCFN-SS013	DN80	330	58.0	13.0	4.0

FOUNTAIN NOZZLE


Material	304 Stainless Steel				
Model	Connection Size	Pressure (kpa)	Water Spray Volume (m3/h)	Spray Height (m)	Cover Diameter (m)
HXCFN-SS014	DN25	30-120	8-17	1.0-5.0	1.2
HXCFN-SS015	DN40	30-140	12-24	1.5-6.0	2.5


Material	304 Stainless Steel				
Model	Connection Size	Pressure (kpa)	Water Spray Volume (m3/h)	Spray Height (m)	Cover Diameter (m)
HXCFN-SS016	DN25	25-60	2.1-4.3	1.0-4.0	0.8-1.5
HXCFN-SS017	DN40	25-85	5.1-12.7	1.0-6.0	0.9-2.0
HXCFN-SS018	DN50	25-115	6.9-22	1.0-18.0	1.2-4.0


Material	304 Stainless Steel				
Model	Connection Size	Pressure (kpa)	Water Spray Volume (m3/h)	Spray Height (m)	Cover Diameter (m)
HXCFN-SS019	DN25	40	7.0	1.5	1.3
HXCFN-SS020	DN40	60	10.0	1.8	1.5
HXCFN-SS021	DN50	80	12.0	2.0	1.8


Material	304 Stainless Steel				
Model	Connection Size	Pressure (kpa)	Water Spray Volume (m3/h)	Spray Height (m)	Cover Diameter (m)
HXCFN-SS022	DN25	40	7.0	1.5	1.3
HXCFN-SS023	DN40	60	10.0	1.8	1.5

FOUNTAIN NOZZLE


Material	304 Stainless Steel				
Model	Connection Size	Pressure (kpa)	Water Spray Volume (m3/h)	Spray Height (m)	Cover Diameter (m)
HXCFN-SS024	DN20	50-70	2.0-4.0	2.0-4.0	1.5-5.0
HXCFN-SS025	DN25	50-150	6.5-13.5	2.0-4.0	1.5-5.0
HXCFN-SS026	DN40	50-200	7.5-19.5	2.0-5.0	2.0-6.0


Material	304 Stainless Steel				
Model	Connection Size	Pressure (kpa)	Water Spray Volume (m3/h)	Spray Height (m)	Cover Diameter (m)
HXCFN-SS027	DN25	20-35	3.0	0.25	0.6
HXCFN-SS028	DN40	20-55	4.0	0.4	1.0
HXCFN-SS029	DN50	35-70	7.0	0.5	1.5
HXCFN-SS119	DN65	40-100	10.0	0.7	1.8

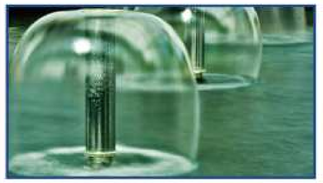


Material	304 Stainless Steel				
Model	Connection Size	Pressure (kpa)	Water Spray Volume (m3/h)	Spray Height (m)	Cover Diameter (m)
HXCFN-SS030	DN25	20-35	2.0	0.25	0.6
HXCFN-SS031	DN40	20-55	3.0	0.40	1.0
HXCFN-SS032	DN50	35-70	5.0	0.50	1.5
HXCFN-SS120	DN65	40-100	9.0	0.70	1.5


Material	304 Stainless Steel				
Model	Connection Size	Pressure (kpa)	Water Spray Volume (m3/h)	Spray Height (m)	Cover Diameter (m)
HXCFN-SS033	DN20	50	2.5	0.2-0.6	0.4-0.8
HXCFN-SS034	DN25	30-80	6.0-22.0	0.3-0.8	0.6-1.2
HXCFN-SS035	DN40	30-80	12.0-28.0	0.3-1.0	0.8-1.5

FOUNTAIN NOZZLE

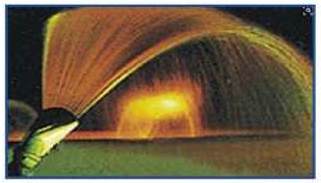


Material	304 Stainless Steel				
Model	Connection Size	Pressure (kpa)	Water Spray Volume (m3/h)	Spray Height (m)	Cover Diameter (m)
HXCFN-SS036	DN20	30-50	2.8	0.2-0.7	0.4-1.0
HXCFN-SS037	DN25	30-80	7.2-25.0	0.3-0.9	0.6-1.5
HXCFN-SS038	DN40	30-80	14.0-30.0	0.3-1.2	0.8-1.8


Material	304 Stainless Steel				
Model	Connection Size	Pressure (kpa)	Water Spray Volume (m3/h)	Spray Height (m)	Cover Diameter (m)
HXCFN-SS039	DN15	50-100	1.5-3.0	0.15-0.30	0.10-0.20
HXCFN-SS040	DN20	50-100	2.0-5.0	0.20-0.35	0.15-0.30
HXCFN-SS041	DN25	50-100	3.5-8.0	0.30-0.50	0.20-0.40
HXCFN-SS042	DN40	50-100	10.0-18.0	0.40-0.80	0.30-0.50
HXCFN-SS043	DN50	60-120	17.0-25.0	0.40-0.80	0.30-0.60


Material	304 Stainless Steel				
Model	Connection Size	Pressure (kpa)	Water Spray Volume (m3/h)	Spray Height (m)	Cover Diameter (m)
HXCFN-SS044	DN25	50-100	3.5-8.0	0.3-0.5	0.2-0.4
HXCFN-SS045	DN40	50-100	10.0-18.0	0.4-0.8	0.3-0.5
HXCFN-SS046	DN50	60-150	17.0-25.0	0.4-0.8	0.3-0.6


Material	304 Stainless Steel				
Model	Connection Size	Pressure (kpa)	Water Spray Volume (m3/h)	Spray Height (m)	Cover Diameter (m)
HXCFN-SS047	DN20	50-100	2.0-5.0	0.2-0.35	0.15-0.30
HXCFN-SS048	DN25	50-100	3.5-8.0	0.3-0.5	0.20-0.40
HXCFN-SS049	DN40	50-100	10.0-18.0	0.4-0.8	0.30-0.50
HXCFN-SS050	DN50	60-150	17.0-25.0	0.4-0.8	0.30-0.60

FOUNTAIN NOZZLE


Material	304 Stainless Steel				
Model	Connection Size	Pressure (kpa)	Water Spray Volume (m3/h)	Spray Height (m)	Cover Diameter (m)
HXCFN-SS051	DN25	50-100	3.5-8.0	0.3-0.5	0.2-0.4
HXCFN-SS052	DN40	50-100	10.0-18.0	0.4-0.8	0.3-0.6


Material	304 Stainless Steel				
Model	Connection Size	Pressure (kpa)	Water Spray Volume (m3/h)	Spray Height (m)	Cover Diameter (m)
HXCFN-SS053	DN20	40-200	2.0-4.0	1.0-2.5	0.20
HXCFN-SS054	DN25	40-200	6.0-10.0	1.0-4.0	0.30
HXCFN-SS055	DN40	50-330	8.0-20.0	1.0-5.0	0.60
HXCFN-SS056	DN50	50-400	12.0-25.0	1.0-6.0	1.00
HXCFN-SS057	DN80	50-450	21.0-50.0	1.0-12.0	1.50


Material	304 Stainless Steel				
Model	Connection Size	Pressure (kpa)	Water Spray Volume (m3/h)	Spray Height (m)	Cover Diameter (m)
HXCFN-SS058	DN15	40-200	2.0-4.0	1.0-1.8	0.2
HXCFN-SS059	DN20	40-200	2.0-4.0	1.0-2.5	0.2
HXCFN-SS060	DN25	40-200	6.0-10.0	1.0-4.0	0.3
HXCFN-SS061	DN40	50-330	8.0-20.0	1.0-5.0	0.6
HXCFN-SS062	DN50	50-400	12.0-25.0	1.0-6.0	1.0


Material	304 Stainless Steel				
Model	Connection Size	Pressure (kpa)	Water Spray Volume (m3/h)	Spray Height (m)	Cover Diameter (m)
HXCFN-SS063	DN25	50-150	3.0-5.0	0.5-3.0	0.3-0.8
HXCFN-SS064	DN40	50-150	5.0-10.0	1.5-5.0	0.5-1.0
HXCFN-SS065	DN50	60-160	6.0-15.0	1.5-6.5	0.5-1.0

FOUNTAIN NOZZLE


Material	304 Stainless Steel				
Model	Connection Size	Pressure (kpa)	Water Spray Volume (m3/h)	Spray Height (m)	Cover Diameter (m)
HXCFN-SS066	DN25	60-180	3.6-6.3	2.0-7.0	0.3-0.8
HXCFN-SS067	DN40	60-200	6.0-9.0	2.0-8.0	0.5-1.0


Material	304 Stainless Steel				
Model	Connection Size	Pressure (kpa)	Water Spray Volume (m3/h)	Spray Height (m)	Cover Diameter (m)
HXCFN-SS068	DN20	50-100	2.7-3.8	1.5-5.0	0.3-0.7
HXCFN-SS069	DN25	60-180	3.6-6.0	2.0-7.0	0.3-0.8
HXCFN-SS070	DN40	60-200	6.0-18.0	2.0-8.0	0.5-1.0
HXCFN-SS071	DN50	60-280	7.0-28.0	2.0-10.0	0.5-1.2


Material	304 Stainless Steel				
Model	Connection Size	Pressure (kpa)	Water Spray Volume (m3/h)	Spray Height (m)	Cover Diameter (m)
HXCFN-SS072	DN15	60-100	2.0-4.0	0.5-2.0	0.15-0.30
HXCFN-SS073	DN20	80-100	4.0-7.0	1.0-2.0	0.20-0.40
HXCFN-SS074	DN25	80-150	6.0-10.0	1.5-4.0	0.30-0.50
HXCFN-SS075	DN40	80-200	10.0-15.0	2.0-5.0	0.30-0.60
HXCFN-SS121	DN50	80-250	10.0-19.0	2.0-6.5	0.30-0.80



Model	Connection Size	Pressure (kpa)	Water Spray Volume (m3/h)	Spray Height (m)	Cover Diameter (m)	Material
HXCFN-SS095	DN40	50-200	10.0-15.0	2.0-3.0	0.5	SUS304
HXCFN-SS096	DN40	50-200	10.0-15.0	2.0-3.0	0.5	Plastic

FOUNTAIN NOZZLE


Material	304 Stainless Steel				
Model	Connection Size	Pressure (kpa)	Water Spray Volume (m3/h)	Spray Height (m)	Cover Diameter (m)
HXCFN-SS078	DN25	30-40	3.5-5.0	1.0-1.8	1.0-2.0
HXCFN-SS079	DN40	30-55	4.8-7.0	1.0-3.3	1.0-3.8
HXCFN-SS080	DN50	50-70	5.5-16.0	2.0-4.5	2.2-4.5


Material	304 Stainless Steel				
Model	Connection Size	Pressure (kpa)	Water Spray Volume (m3/h)	Spray Height (m)	Cover Diameter (m)
HXCFN-SS081	DN25	40-100	3.5-5.0	2.0-4.0	1.0-1.5
HXCFN-SS082	DN40	40-120	4.8-7.0	2.3-5.5	1.5-2.0
HXCFN-SS083	DN50	40-150	14.5-25.5	2.7-7.7	2.0-3.0


Material	304 Stainless Steel				
Model	Connection Size	Pressure (kpa)	Water Spray Volume (m3/h)	Spray Height (m)	Cover Diameter (m)
HXCFN-SS084	DN15	70-250	0.8-1.8	1.0-2.3	1.0-2.0
HXCFN-SS085	DN20	100-300	1.0-2.3	1.0-2.8	1.5-3.0
HXCFN-SS086	DN25	100-400	1.2-2.3	1.0-3.2	1.8-3.5


Material	304 Stainless Steel				
Model	Connection Size	Pressure (kpa)	Water Spray Volume (m3/h)	Spray Height (m)	Cover Diameter (m)
HXCFN-SS087	DN25	60-80	5.0-10.0	1.0	0.6
HXCFN-SS088	DN40	80-100	8.0-15.0	1.5	1.0
HXCFN-SS089	DN50	80-150	20.0-25.0	1.8	1.2
HXCFN-SS090	DN80	80-200	40.0-50.0	2.3	1.8

FOUNTAIN NOZZLE


Material	304 Stainless Steel				
Model	Connection Size	Pressure (kpa)	Water Spray Volume (m3/h)	Spray Height (m)	Cover Diameter (m)
HXCFN-SS091	DN25	60-80	3.0-5.0	1.0	0.6
HXCFN-SS092	DN40	80-100	5.0-8.0	1.5	1.0
HXCFN-SS093	DN50	80-150	10.0-15.0	1.8	1.2
HXCFN-SS094	DN80	80-200	30.0-40.0	2.3	1.8


Material	304 Stainless Steel				
Model	Connection Size	Pressure (kpa)	Water Spray Volume (m3/h)	Spray Height (m)	Cover Diameter (m)
HXCFN-SS122	DN20	50-150	2.7-3.8	1.5-5.0	0.3-0.7
HXCFN-SS097	DN25	60-180	3.6-6.0	2.0-7.0	0.3-0.8
HXCFN-SS098	DN40	60-200	6.0-18.0	2.0-8.0	0.5-1.0
HXCFN-SS123	DN50	60-280	7.0-28.0	2.0-10.0	0.5-1.2


Material	304 Stainless Steel				
Model	Connection Size	Pressure (kpa)	Water Spray Volume (m3/h)	Spray Height (m)	Cover Diameter (m)
HXCFN-SS101	DN15	15-30	1.1	0.2	0.3
HXCFN-SS102	DN20	15-30	1.5	0.25	0.5
HXCFN-SS103	DN25	20-35	2.0	0.3	0.6
HXCFN-SS104	DN40	20-55	3.0	0.4	1.0


Material	304 Stainless Steel				
Model	Connection Size	Pressure (kpa)	Water Spray Volume (m3/h)	Spray Height (m)	Cover Diameter (m)
HXCFN-SS105	DN15	15-30	1.1	0.2	0.3
HXCFN-SS106	DN20	15-30	1.5	0.25	0.5
HXCFN-SS107	DN25	20-35	2.0	0.3	0.6
HXCFN-SS108	DN40	20-55	3.0	0.4	1.0


Material	304 Stainless Steel				
Model	Connection Size	Pressure (kpa)	Water Spray Volume (m3/h)	Spray Height (m)	Cover Diameter (m)
HXCFN-SS109	DN65	50-200	11.5	2.0-4.2	2.5


Material	304 Stainless Steel				
Model	Connection Size	Pressure (kpa)	Water Spray Volume (m3/h)	Spray Height (m)	Cover Diameter (m)
HXCFN-SS111	DN40	150-450	29	2.0-5.0	3.0
HXCFN-SS124	DN50	150-500	38	2.0-6.0	3.5
HXCFN-SS125	DN65	150-850	47	2.5-8.0	4.0


Material	304 Stainless Steel				
Model	Connection Size	Pressure (kpa)	Water Spray Volume (m3/h)	Spray Height (m)	Cover Diameter (m)
HXCFN-SS113	DN40	50-200	30	3.2	2.5
HXCFN-SS114	DN50	50-300	35	3.5	3.0


Material	304 Stainless Steel				
Model	Nozzle Diameter	Connection Size	Pressure (kpa)	Water Spray Volume (m3/h)	Spray Height (m)
HXCFN-SS115	38	DN100	330-1300	105-208	20-80
HXCFN-SS116	45	DN100	330-1350	144-290	20-80
HXCFN-SS117	50	DN150	330-1650	186-401	20-100
HXCFN-SS118	58	DN150	330-2000	291-673	20-120


Material	304 Stainless Steel				
Model	Connection Size	Pressure (kpa)	Water Spray Volume (m3/h)	Spray Height (m)	Cover Diameter (m)
HXCFN-SS126	DN40 (outside)	150-300	5-10	3-8	Ray
HXCFN-SS127	DN40 (inside)	150-300	5-10	3-8	Ray
HXCFN-SS128	DN50 (outside)	150-350	10-25	3-10	Ray
HXCFN-SS129	DN50 (inside)	150-350	10-25	3-10	Ray
HXCFN-SS130	DN50 (lengthen/outside)	150-400	10-25	3-12	Ray

FOUNTAIN NOZZLE


Material	304 Stainless Steel				
Model	Connection Size	Pressure (kpa)	Water Spray Volume (m3/h)	Spray Height (m)	Cover Diameter (m)
HXCFN-SS131	DN25	50-70	2.4-4.0	2.0-4.0	1.5-5.0
HXCFN-SS132	DN40	50-150	6.5-13.5	2.0-4.0	1.5-5.0
HXCFN-SS133	DN50	50-150	7.0-14.0	2.0-4.0	1.5-5.0


Material	304 Stainless Steel				
Model	Connection Size	Pressure (kpa)	Water Spray Volume (m3/h)	Spray Height (m)	Cover Diameter (m)
HXCFN-SS134	DN50	50-150	7.0-14.0	2.0-4.0	1.5-5.0


Material	304 Stainless Steel				
Model	Connection Size	Pressure (kpa)	Water Spray Volume (m3/h)	Spray Height (m)	Cover Diameter (m)
HXCFN-SS135	DN25	30-50	2.80	0.2-0.7	0.4-1.0
HXCFN-SS136	DN40	30-80	7.2-25.0	0.3-0.9	0.6-1.5
HXCFN-SS137	DN50	30-80	14.0-30.0	0.3-1.2	0.8-1.8
HXCFN-SS138	DN50	30-80	7.2-25.0	0.3-0.9	0.6-1.5


Material	304 Stainless Steel				
Model	Connection Size	Pressure (kpa)	Water Spray Volume (m3/h)	Spray Height (m)	Cover Diameter (m)
HXCFN-SS139	DN50	150-350	16.50	3.0-10.0	2.0

FOUNTAIN NOZZLE


Material	304 Stainless Steel				
Model	Connection Size	Pressure (kpa)	Water Spray Volume (m3/h)	Spray Height (m)	Cover Diameter (m)
HXCFN-SS140	1/2″	15-30	1.0	0.20	0.3
HXCFN-SS141	3/4″	15-30	2.0	0.25	0.5
HXCFN-SS142	1″	20-35	3.0	0.25	0.6
HXCFN-SS143	1½″	20-55	4.0	0.40	1.0


Material	304 Stainless Steel				
Model	Connection Size	Pressure (kpa)	Water Spray Volume (m3/h)	Spray Height (m)	Cover Diameter (m)
HXCFN-SS144	1/2″	15-30	1.0	0.20	0.3
HXCFN-SS145	3/4″	15-30	2.0	0.25	0.5
HXCFN-SS146	1″	20-35	3.0	0.25	0.6
HXCFN-SS147	1½″	20-55	4.0	0.40	1.0

FOUNTAIN NOZZLE

Material	304 Stainless Steel				
Model	Connection Size	Pressure (kpa)	Water Spray Volume (m3/h)	Spray Height (m)	Cover Diameter (m)
HXCFN-SS148	1″	20-35	2.0	0.3	0.6
HXCFN-SS149	1½″	20-55	3.0-4.0	0.4	0.9
HXCFN-SS150	2″	35-70	3.0-5.0	0.4	1.2

Model	Connection Size	Pressure (kpa)	Water Spray Volume (m3/h)	Spray Height (m)	Cover Diameter (m)	Material
HXCFN-SS076	DN25	50-200	10.0-15.0	2.0-3.0	0.5	SUS304
HXCFN-SS077	DN25	50-200	10.0-15.0	2.0-3.0	0.5	Plastic


Material	Brass				
Model	Connection Size	Outlet (mm)	Height (mm)	Weight (g)	Material
HXCFN-BA001	DN15	5	73	50	Brass
HXCFN-BA002	DN20	7	86	87	Brass
HXCFN-BA003	DN25	9	113	148	Brass
HXCFN-BA004	DN32	12	180	402	Brass
HXCFN-BA005	DN40	12	190	404	Brass
HXCFN-BA006	DN50	14	210	735	Brass
HXCFN-BA007	DN65	22	360	2200	Brass
HXCFN-BA008	DN80	28	400	3100	Brass
HXCFN-BA009	DN100	30	412	3800	Brass

FOUNTAIN NOZZLE


Material	Brass				
Model	Connection Size	Outlet (mm)	Height (mm)	Weight (g)	Material
HXCFN-BA010	DN15	6	90	107	Brass
HXCFN-BA011	DN20	7	100	192	Brass
HXCFN-BA012	DN25	9	110	293	Brass
HXCFN-BA013	DN40	12	150	851	Brass
HXCFN-BA014	DN50	14	180	1441	Brass


Material	Brass				
Model	Connection Size	Outlet (mm)	Height (mm)	Weight (g)	Material
HXCFN-BA015	DN15	7-8	82	94	Brass
HXCFN-BA016	DN20	9	91	140	Brass
HXCFN-BA017	DN25	12-14	110	310	Brass
HXCFN-BA018	DN40	20	160	750	Brass
HXCFN-BA019	DN50	20	200	1070	Brass


Material	Brass				
Model	Connection Size	Outlet (mm)	Height (mm)	Weight (g)	Material
HXCFN-BA020	DN25	10-12	413	583	Brass
HXCFN-BA021	DN40	16-20	195	1250	Brass


Material	Brass				
Model	Connection Size	Outlet (mm)	Height (mm)	Weight (g)	Material
HXCFN-BA022	DN15	6	90	110	Brass
HXCFN-BA023	DN20	7	100	197	Brass
HXCFN-BA024	DN25	9	110	292	Brass

FOUNTAIN NOZZLE


Material	Brass				
Model	Connection Size	Outlet (mm)	Height (mm)	Weight (g)	Material
HXCFN-BA025	M6	1	45	10	Brass
HXCFN-BA026	M8	3	46	14	Brass
HXCFN-BA027	M10	3	47	15	Brass
HXCFN-BA028	M12	4	48	18	Brass


Material	Brass				
Model	Connection Size	Outlet (mm)	Height (mm)	Weight (g)	Material
HXCFN-BA029	M10	4	61	35	Brass
HXCFN-BA030	M12	4	66	38	Brass
HXCFN-BA031	M14	5	74	55	Brass


Material	Brass				
Model	Connection Size	Outlet (mm)	Height (mm)	Weight (g)	Material
HXCFN-BA032	DN15	5	95	80	Brass
HXCFN-BA033	DN20	7	110	135	Brass
HXCFN-BA034	DN25	9	125	170	Brass


Material	Brass				
Model	Connection Size	Outlet (mm)	Height (mm)	Weight (g)	Material
HXCFN-BA035	DN15	5	95	67	Brass
HXCFN-BA036	DN20	7	110	128	Brass
HXCFN-BA037	DN25	9	125	156	Brass
HXCFN-BA038	DN40	12	180	404	Brass
HXCFN-BA039	DN40	14	170	413	Brass
HXCFN-BA040	DN40	16	180	430	Brass
HXCFN-BA041	DN40	20	170	447	Brass

FOUNTAIN NOZZLE


Material	Brass				
Model	Connection Size	Outlet (mm)	Height (mm)	Weight (g)	Material
HXCFN-BA042	DN25	4	130	415	Brass
HXCFN-BA043	DN40	8+10	190	1120	Brass
HXCFN-BA044	DN50	8+10	200	1260	Brass
HXCFN-BA045	DN65	10+12	270	2400	Brass
HXCFN-BA046	DN80	10+12	280	2900	Brass


Material	Brass				
Model	Connection Size	Outlet (mm)	Height (mm)	Weight (g)	Material
HXCFN-BA047	DN25	5+6	120	410	Brass
HXCFN-BA048	DN40	9+17	155	1315	Brass
HXCFN-BA049	DN50	9+17	160	1410	Brass
HXCFN-BA050	DN65	9+17	200	2300	Brass


Material	Brass				
Model	Connection Size	Outlet (mm)	Height (mm)	Weight (g)	Material
HXCFN-BA051	DN25	4*18	160	1515	Brass
HXCFN-BA052	DN40	4*19	170	1816	Brass
HXCFN-BA053	DN50	4*19	200	2250	Brass


Material	Brass				
Model	Connection Size	Outlet (mm)	Height (mm)	Weight (g)	Material
HXCFN-BA054	DN40		125	1800	Brass

FOUNTAIN NOZZLE


Material	Brass				
Model	Connection Size	Outlet (mm)	Height (mm)	Weight (g)	Material
HXCFN-BA055	DN08		42	64	Brass
HXCFN-BA056	DN15		60	105	Brass
HXCFN-BA057	DN20		66	146	Brass
HXCFN-BA058	DN25		105	325	Brass
HXCFN-BA059	DN40		110	415	Brass
HXCFN-BA060	DN50		120	500	Brass


Material	Brass				
Model	Connection Size	Outlet (mm)	Height (mm)	Weight (g)	Material
HXCFN-BA061	DN08		35	61	Brass
HXCFN-BA062	DN15		40	100	Brass
HXCFN-BA063	DN20		50	120	Brass
HXCFN-BA064	DN25		85	270	Brass
HXCFN-BA065	DN40		86	380	Brass
HXCFN-BA066	DN50		87	400	Brass


Material	Brass				
Model	Connection Size	Outlet (mm)	Height (mm)	Weight (g)	Material
HXCFN-BA067	DN25	5*6	130	1300	Brass
HXCFN-BA068	DN40	5*6	180	1540	Brass
HXCFN-BA069	DN50	5*6	200	2000	Brass


Material	Brass				
Model	Connection Size	Outlet (mm)	Height (mm)	Weight (g)	Material
HXCFN-BA070	DN25		130	1110	Brass
HXCFN-BA071	DN40		180	1420	Brass
HXCFN-BA072	DN50		185	1650	Brass

FOUNTAIN NOZZLE


Material	Brass				
Model	Connection Size	Outlet (mm)	Height (mm)	Weight (g)	Material
HXCFN-BA073	DN25		130	1033	Brass
HXCFN-BA074	DN40		180	1200	Brass
HXCFN-BA075	DN50		185	1370	Brass


Material	Brass				
Model	Connection Size	Outlet (mm)	Height (mm)	Weight (g)	Material
HXCFN-BA076	DN25		120	380	Brass
HXCFN-BA077	DN40		135	500	Brass


Material	Brass				
Model	Connection Size	Outlet (mm)	Height (mm)	Weight (g)	Material
HXCFN-BA078	DN15		100	160	Brass
HXCFN-BA079	DN20		100	160	Brass
HXCFN-BA080	DN25		133	310	Brass
HXCFN-BA081	DN40		140	475	Brass
HXCFN-BA082	DN50		160	785	Brass


Material	Brass				
Model	Connection Size	Outlet (mm)	Height (mm)	Weight (g)	Material
HXCFN-BA083	DN15		100	160	Brass
HXCFN-BA084	DN20		100	160	Brass
HXCFN-BA085	DN25		133	310	Brass
HXCFN-BA086	DN40		140	452	Brass
HXCFN-BA087	DN50		160	678	Brass

FOUNTAIN NOZZLE

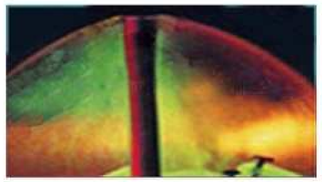


Material	Brass				
Model	Connection Size	Outlet (mm)	Height (mm)	Weight (g)	Material
HXCFN-BA088	DN15		140	210	Brass
HXCFN-BA089	DN20		160	350	Brass
HXCFN-BA090	DN25		180	328	Brass
HXCFN-BA091	DN40		200	500	Brass

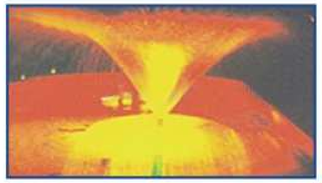


Material	Brass				
Model	Connection Size	Outlet (mm)	Height (mm)	Weight (g)	Material
HXCFN-BA092	DN25			460	Brass
HXCFN-BA093	DN40		90+140	708	Brass
HXCFN-BA094	DN50		115+165	1250	Brass


Material	Brass				
Model	Connection Size	Outlet (mm)	Height (mm)	Weight (g)	Material
HXCFN-BA095	DN25		200	568	Brass
HXCFN-BA096	DN40		250	990	Brass


Material	Brass				
Model	Connection Size	Outlet (mm)	Height (mm)	Weight (g)	Material
HXCFN-BA097	DN15	2.5*40	90	195	Brass
HXCFN-BA098	DN20	2.5*40	90	195	Brass
HXCFN-BA099	DN25	2.5*65	150	545	Brass
HXCFN-BA100	DN40	2.5*65	150	588	Brass
HXCFN-BA101	DN50	2.5*65	160	692	Brass

FOUNTAIN NOZZLE


Material	Brass				
Model	Connection Size	Outlet (mm)	Height (mm)	Weight (g)	Material
HXCFN-BA102	DN25	4*135	130	845	Brass
HXCFN-BA103	DN40	4*135	180	1143	Brass
HXCFN-BA104	DN50	4*135	220	1336	Brass

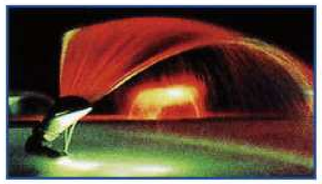


Material	Brass				
Model	Connection Size	Outlet (mm)	Height (mm)	Weight (g)	Material
HXCFN-BA105	DN25	3.5*68	85	320	Brass
HXCFN-BA106	DN40	4*82	110	570	Brass
HXCFN-BA107	DN50	5*118	120	1300	Brass


Material	Brass				
Model	Connection Size	Outlet (mm)	Height (mm)	Weight (g)	Material
HXCFN-BA108	DN20	4	125	195	Brass
HXCFN-BA109	DN25	5	160	195	Brass
HXCFN-BA110	DN40	6	180	545	Brass
HXCFN-BA111	DN50	6	250	588	Brass


Material	Brass				
Model	Connection Size	Outlet (mm)	Height (mm)	Weight (g)	Material
HXCFN-BA112	DN15	10	90	105	Brass
HXCFN-BA113	DN20	10	90	105	Brass
HXCFN-BA114	DN25	11	150	280	Brass
HXCFN-BA115	DN40	16	185	640	Brass
HXCFN-BA116	DN50	21	200	875	Brass
HXCFN-BA117	DN65	24	200	4400	Brass
HXCFN-BA118	DN80	25	330	4500	Brass

FOUNTAIN NOZZLE


Material	Brass				
Model	Connection Size	Outlet (mm)	Height (mm)	Weight (g)	Material
HXCFN-BA119	DN15	10	110	162	Brass
HXCFN-BA120	DN20	10	110	162	Brass
HXCFN-BA121	DN25	12	140	270	Brass
HXCFN-BA122	DN40	14	155	430	Brass
HXCFN-BA123	DN50	16	180	650	Brass


Material	Brass				
Model	Connection Size	Outlet (mm)	Height (mm)	Weight (g)	Material
HXCFN-BA124	DN15	10	60	140	Brass
HXCFN-BA125	DN20	12	74	205	Brass
HXCFN-BA126	DN25	16	85	310	Brass
HXCFN-BA127	DN40	17.5	105	560	Brass
HXCFN-BA128	DN50	19	130	950	Brass


Material	Brass				
Model	Connection Size	Outlet (mm)	Height (mm)	Weight (g)	Material
HXCFN-BA129	DN15	10	110	126	Brass
HXCFN-BA130	DN20	10	110	126	Brass
HXCFN-BA131	DN25	12	140	222	Brass
HXCFN-BA132	DN40	13	155	343	Brass
HXCFN-BA133	DN50	16	180	520	Brass
HXCFN-BA134	DN65	26	200	1500	Brass
HXCFN-BA135	DN80	30	200	1830	Brass
HXCFN-BA136	DN100	35	200	3000	Brass


Material	Brass				
Model	Connection Size	Outlet (mm)	Height (mm)	Weight (g)	Material
HXCFN-BA137	DN25	20	155	320	Brass
HXCFN-BA138	DN40	30	200	700	Brass
HXCFN-BA139	DN50	30	220	900	Brass

FOUNTAIN NOZZLE


Material	Brass				
Model	Connection Size	Outlet (mm)	Height (mm)	Weight (g)	Material
HXCFN-BA140	DN25	19	150	315	Brass
HXCFN-BA141	DN40	21	170	435	Brass
HXCFN-BA142	DN50	31	180	635	Brass


Material	Brass				
Model	Connection Size	Outlet (mm)	Height (mm)	Weight (g)	Material
HXCFN-BA143	DN25	21	140	290	Brass
HXCFN-BA144	DN40	31	165	550	Brass
HXCFN-BA145	DN50	42	200	1167	Brass


Material	Brass				
Model	Connection Size	Outlet (mm)	Height (mm)	Weight (g)	Material
HXCFN-BA146	DN15	18	145	281	Brass
HXCFN-BA147	DN20	23	155	422	Brass
HXCFN-BA148	DN25	28	190	700	Brass
HXCFN-BA149	DN40	30	210	900	Brass


Material	Brass				
Model	Connection Size	Outlet (mm)	Height (mm)	Weight (g)	Material
HXCFN-BA150	DN25	30	160	900	Brass
HXCFN-BA151	DN40	42	210	2100	Brass

FOUNTAIN NOZZLE


Material	Brass				
Model	Connection Size	Outlet (mm)	Height (mm)	Weight (g)	Material
HXCFN-BA152	DN25	28	200	680	Brass
HXCFN-BA153	DN40	40	270	1717	Brass
HXCFN-BA154	DN50	50	320	2826	Brass


Material	Brass				
Model	Connection Size	Outlet (mm)	Height (mm)	Weight (g)	Material
HXCFN-BA155	DN15	4*4	110	450	Brass
HXCFN-BA156	DN20	4*4	110	450	Brass
HXCFN-BA157	DN25	6*4	155	859	Brass
HXCFN-BA158	DN40	7*4	160	1050	Brass
HXCFN-BA159	DN50	8*4	210	2200	Brass


Material	Brass				
Model	Connection Size	Outlet (mm)	Height (mm)	Weight (g)	Material
HXCFN-BA160	DN25	6*4	155	1039	Brass

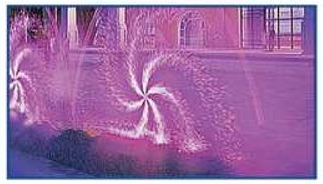


Material	Brass				
Model	Connection Size	Outlet (mm)	Height (mm)	Weight (g)	Material
HXCFN-BA161	DN25	6*8		963	Brass
HXCFN-BA162	DN40	7*8		1370	Brass
HXCFN-BA163	DN50	8*8		2480	Brass

FOUNTAIN NOZZLE


Material	Brass				
Model	Connection Size	Outlet (mm)	Outlet Pipe (quantity)	Weight (g)	Material
HXCFN-BA164	DN25		30 sticks	3720	Brass
HXCFN-BA165	DN40		41 sticks	6411	Brass
HXCFN-BA166	DN50		65 sticks	13795	Brass
HXCFN-BA167	DN80		105 sticks	30000	Brass


Material	Brass				
Model	Connection Size	Outlet (mm)	Outlet Pipe (quantity)	Weight (g)	Material
HXCFN-BA168	DN25		16 sticks	2800	Brass
HXCFN-BA169	DN40		26 sticks	4370	Brass
HXCFN-BA170	DN50		46 sticks	9550	Brass
HXCFN-BA171	DN80		52 sticks	19700	Brass

Underwater Lights




- Shell Material: SS304 stainless steel (standard), SS316 stainless steel (optional).
- Tempered Heat-resistant Safety Glass: High light transmittance tempered ultra-white glass, 94% light transmittance, high hardness, no fragile and more durable.
- LED Light Source: Cree/Osram/Lumileds/Epistar/Epileds.
- Heat Dissipation Structure: Integrated heat dissipation structure design, patented heat conduction system, built-in overload and overheat protection device, adaptive power output, high-quality high thermal conductivity PCB substrate, thermal conductivity ≥2.0w/MK.
- Waterproof Structure: The sealing ring is made of anti-aging silicone rubber material, patented sealing technology, a special sealing structure to meet the requirements of long-term underwater use, and waterproof grade IP68.
- Cable: Underwater special JHS cable.

Ring Lights


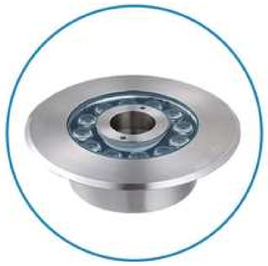

- Stainless Steel Light Body: SS304 stainless steel.
- Tempered Mirror Glass: High light transmittance tempered glass, high light transmittance, and high hardness, are not easy to be broken and are more durable.
- LED Light Source: High-brightness LED light source, pure color, high brightness, energy saving and environmental protection, long service life, wide irradiation range.
- Heat Dissipation: The strict manufacturing process and water circulation heat dissipation, faster heat dissipation, and longer life.
- Waterproof Connector: High-grade waterproof wiring port, waterproof grade IP68.
  Cable: High-quality UL rubber wire, oil resistance, cold resistance, high-temperature resistance, UV resistance, good flexibility, and high strength.

Recessed Underground Lights




- Stainless Steel Cover: Thickened 304 stainless steel.
- Tempered Mirror Glass: High light transmittance tempered glass, high light transmittance, high hardness, not easy to be broken, more durable.
- Embedded Parts: Super-thick high-grade ABS flame retardant plastic embedded parts, pre-buried installation, to facilitate the installation of underground light in the later stage, protect the lamp body from corrosion, and prolong the service life of the lamps.
- LED Light Source: Imported high-brightness LED light source, pure color, high brightness, energy saving and environmental protection, long service life, and wide irradiation range.
- Waterproof Connector: High-grade waterproof wiring port, waterproof grade IP68.
- Cable: High-quality UL rubber wire, oil resistance, cold resistance, high-temperature resistance, UV resistance, good flexibility, and high strength.

Wall Washer Lights




- Stainless Steel Light Body: Thickened 304 stainless steel, polished and sealed glaze, non-fading, anti-corrosion, anti-cracking, beautiful appearance, fashionable and generous.
- Tempered Mirror Glass: High light transmittance tempered glass, high light transmittance, high hardness, not easy to be broken, more durable.
- LED Light Source: Imported high-brightness LED light source, pure color, high brightness, energy saving and environmental protection, long service life, and wide irradiation range.
- Heat Dissipation: The strict manufacturing process and water circulation heat dissipation, faster heat dissipation, and longer life.
- Waterproof Connector: High-grade waterproof wiring port, waterproof grade IP68.
- Cable: High-quality UL rubber wire, oil resistance, cold resistance, high-temperature resistance, UV resistance, good flexibility, and high strength.

HX105G

Equipment Exhibition

Product Size

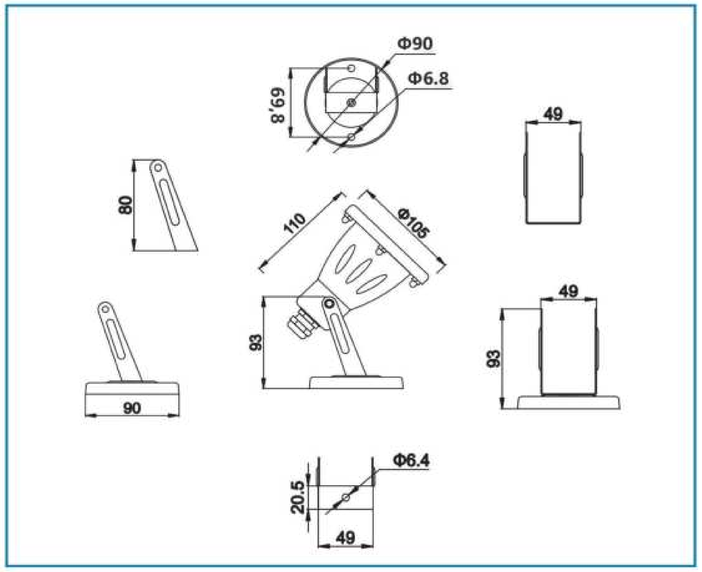

Technical Parameter

Model / Control Method	HX105G - 3*1W				HX105G - 3*3W			
	DC12V	AC12V	DC24V	AC24V	DC12V	AC12V	DC24V	AC24V
Monochrome	✲	✲	✲	✲				
RGB (Internal Control)		✲		✲		✲		✲
RGB (External Control)	✲	✲	✲	✲	✲	✲	✲	✲
DMX512								
Installation Method	Disc Base							
Weight Reference	1.0KG							

HX120G

Equipment Exhibition

Product Size

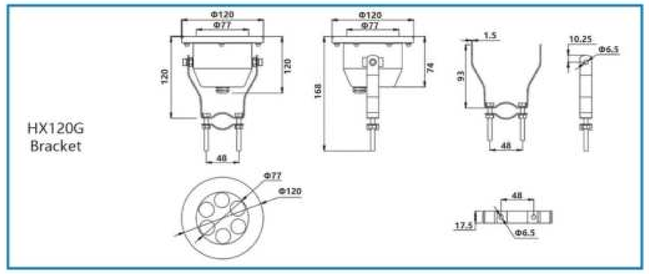

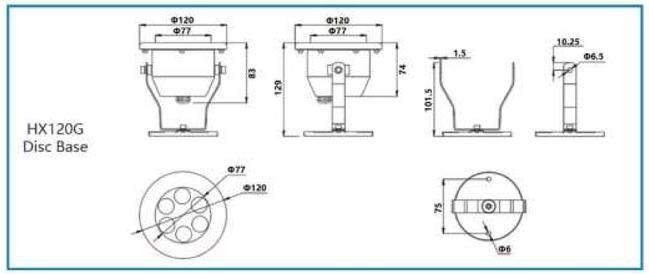

Technical Parameter

Model / Control Method	HX120G - 3*1W				HX120G - 6*1W			
	DC12V	AC12V	DC24V	AC24V	DC12V	AC12V	DC24V	AC24V
Monochrome	✲	✲	✲	✲	✲	✲	✲	✲
RGB (Internal Control)		✲		✲		✲		✲
RGB (External Control)	✲	✲	✲	✲	✲	✲	✲	✲
DMX512							✲	
Installation Method	Clamp Type Disc Base							
Weight Reference	1.2KG							

Model / Control Method	HX120G - 3*2W				HX120G - 3*3W				HX120G - 3*4W (RGBW)			
	DC12V	AC12V	DC24V	AC24V	DC12V	AC12V	DC24V	AC24V	DC12V	AC12V	DC24V	AC24V
Monochrome	✲	✲	✲	✲								
RGB (Internal Control)		✲		✲				✲				✲
RGB (External Control)	✲	✲	✲	✲			✲				✲	
DMX512							✲				✲	
Installation Method	Clamp Type Disc Base								Pinch Pipe/Disc Base			
Weight Reference	1.2KG								1.2KG			

HX145G

Equipment Exhibition

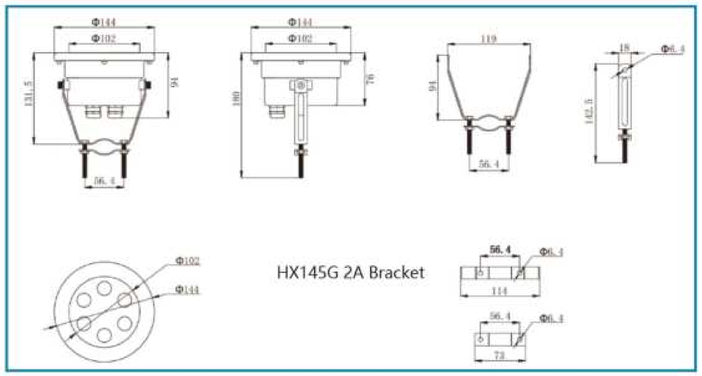

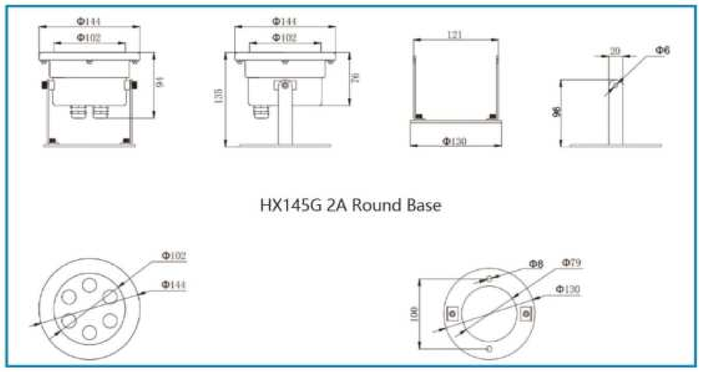

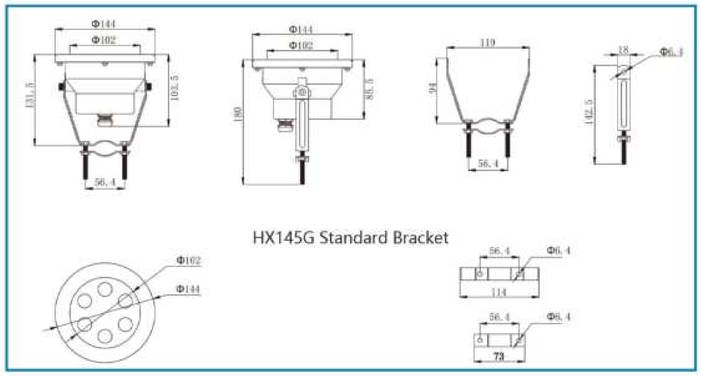

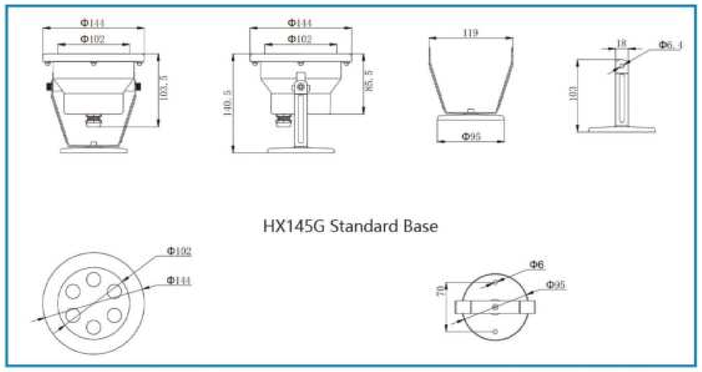

HX145G

Technical Parameter

Model / Control Method	HX145G - 9*1W				HX145G - 12*1W				HX145G - 9*2W				HX145G - 12*2W			
	DC12V	AC12V	DC24V	AC24V	DC12V	AC12V	DC24V	AC24V	DC12V	AC12V	DC24V	AC24V	DC12V	AC12V	DC24V	AC24V
Monochrome	✲	✲	✲	✲	✲	✲	✲	✲	✲	✲	✲	✲			✲	✲
RGB (Internal Control)		✲		✲		✲		✲		✲		✲				✲
RGB (External Control)	✲	✲	✲	✲	✲	✲	✲	✲	✲	✲	✲	✲			✲	✲
DMX512	✲	✲	✲	✲			✲	✲	✲	✲	✲	✲			✲	✲
Installation Method	Clamp Type Disc Base								Clamp Type Disc Base							
Weight Reference	1.2KG								1.2KG							

Model / Control Method	HX145G - 9*1W				HX145G - 12*1W				HX145G - 9*2W				HX145G - 12*2W			
	DC12V	AC12V	DC24V	AC24V	DC12V	AC12V	DC24V	AC24V	DC12V	AC12V	DC24V	AC24V	DC12V	AC12V	DC24V	AC24V
Monochrome	✲	✲	✲	✲	✲	✲	✲	✲	✲	✲	✲	✲			✲	✲
RGB (Internal Control)		✲		✲		✲		✲		✲		✲				✲
RGB (External Control)	✲	✲	✲	✲	✲	✲	✲	✲	✲	✲	✲	✲			✲	✲
DMX512	✲	✲	✲	✲			✲	✲	✲	✲	✲	✲			✲	✲
Installation Method	Clamp Type Disc Base								Clamp Type Disc Base							
Weight Reference	1.2KG								1.2KG							

Model / Control Method	HX145G - 4*3W (RGB)				HX145G - 6*3W (RGB)				HX145G - 4*6W (RGB)				HX145G - 6*6W (RGB)			
	DC12V	AC12V	DC24V	AC24V	DC12V	AC12V	DC24V	AC24V	DC12V	AC12V	DC24V	AC24V	DC12V	AC12V	DC24V	AC24V
Monochrome																
RGB (Internal Control)						✲		✲								
RGB (External Control)					✲	✲	✲	✲								
DMX512			✲				✲	✲			✲				✲	✲
Installation Method	Clamp Type Disc Base								Clamp Type Disc Base							
Weight Reference	1.2KG								1.2KG							

Model / Control Method	HX145G - 3*4W (RGBW)				HX145G - 5*4W (RGBW)				HX145G - 6*4W (RGBW)			
	DC12V	AC12V	DC24V	AC24V	DC12V	AC12V	DC24V	AC24V	DC12V	AC12V	DC24V	AC24V
Monochrome												
RGB (Internal Control)												
RGB (External Control)			✲				✲				✲	
DMX512			✲				✲				✲	
Installation Method	Clamp Type Disc Base								Clamp Type Disc Base			
Weight Reference	1.2KG								1.2KG			

HX170G

Equipment Exhibition

Product Size

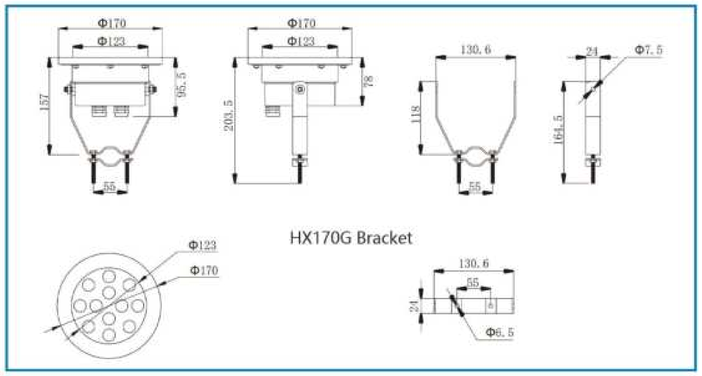

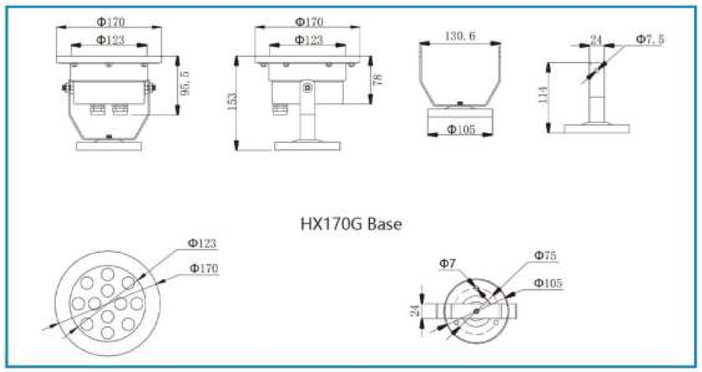

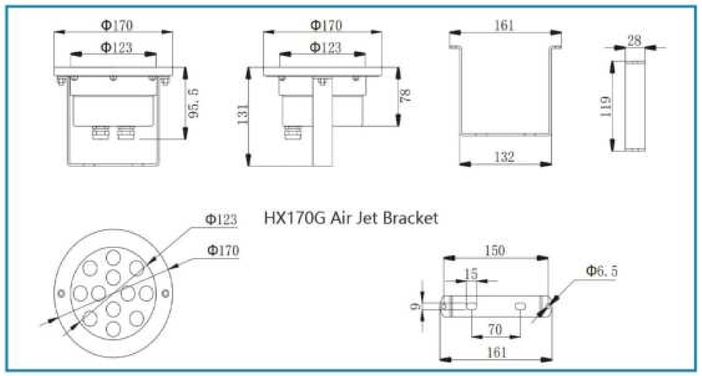

HX170G

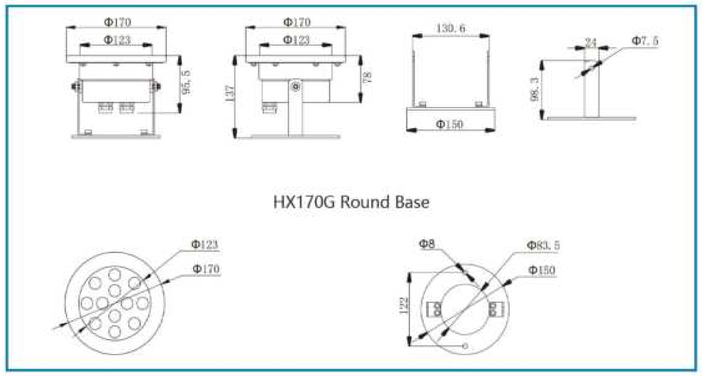

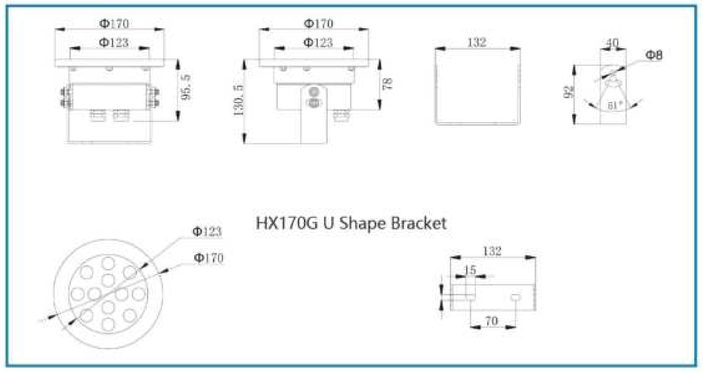

Technical Parameter

Model / Control Method	HX170G - 12*1W				HX170G - 18*1W				HX170G - 12*2W				HX170G - 18*2W			
	DC12V	AC12V	DC24V	AC24V	DC12V	AC12V	DC24V	AC24V	DC12V	AC12V	DC24V	AC24V	DC12V	AC12V	DC24V	AC24V
Monochrome	*	*	*	*	*	*	*	*	*	*	*	*	*	*	*	*
RGB (Internal Control)		*		*		*		*		*		*		*		*
RGB (External Control)	*	*	*	*	*	*	*	*	*	*	*	*	*	*	*	*
DMX512			*	*			*	*			*	*			*	*
Installation Method	Clamp Type Disc Base								Clamp Type Disc Base							
Weight Reference	1.8KG								1.8KG							

Model / Control Method	HX170G - 6*4W(RGBW)				HX170G - 6*6W (RGBW)			
	DC12V	AC12V	DC24V	AC24V	DC12V	AC12V	DC24V	AC24V
Monochrome								
RGB (Internal Control)								
RGB (External Control)	*	*	*	*	*	*	*	*
DMX512			*				*	
Installation Method	Clamp Type Disc Base							
Weight Reference	1.8KG							

HX180G

Equipment Exhibition

Product Size

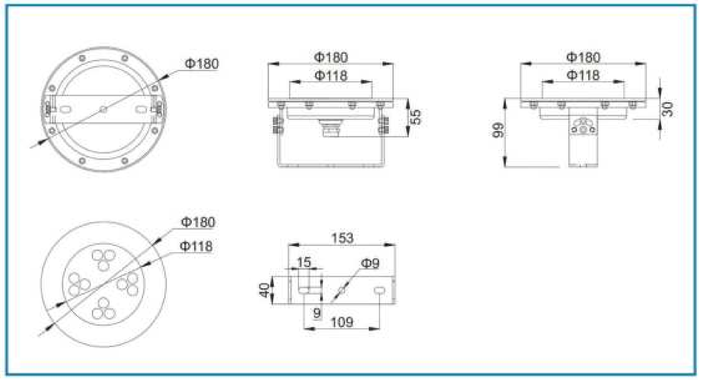

Technical Parameter

Model / Control Method	HX180G - 12*1W				HX180G - 12*2W			
	DC12V	AC12V	DC24V	AC24V	DC12V	AC12V	DC24V	AC24V
Monochrome	✻		✻		✻		✻	
RGB (Internal Control)								
RGB (External Control)	✻		✻		✻		✻	
DMX512			✻				✻	
Installation Method	U Shape Bracket							
Weight Reference	2.0KG							

HX190G

Equipment Exhibition

Product Size

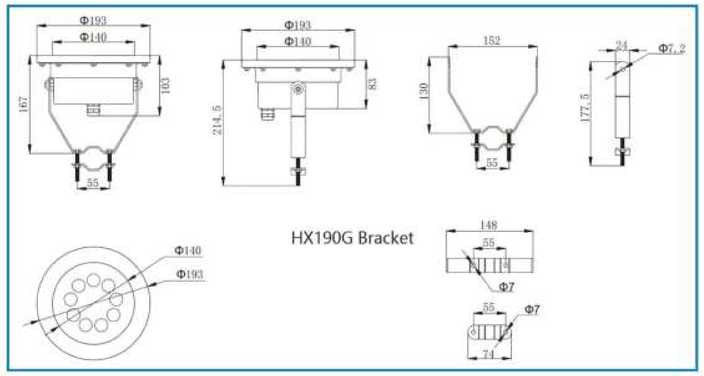

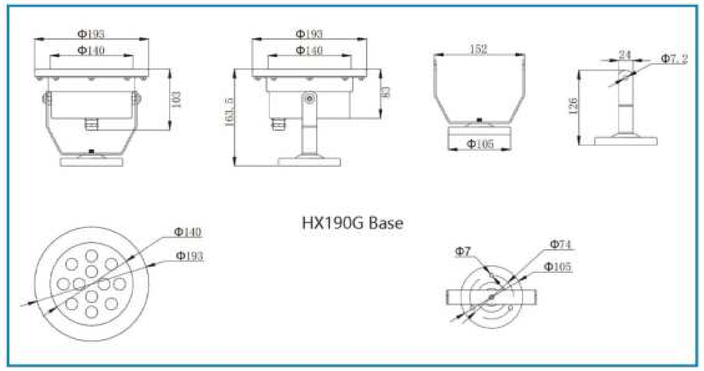

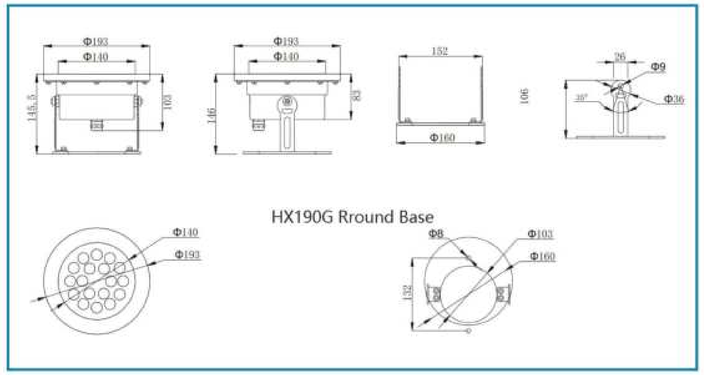

HX190G

Product Size

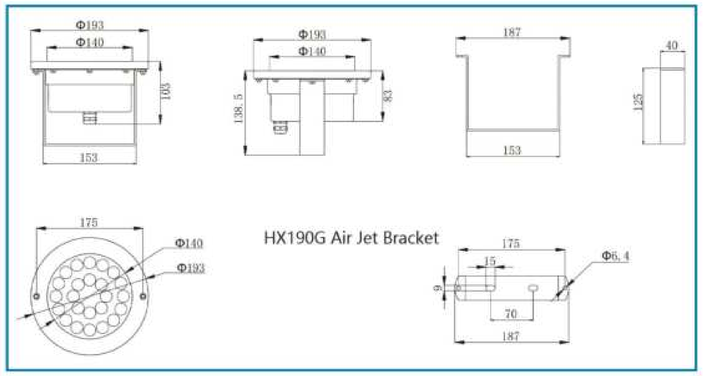

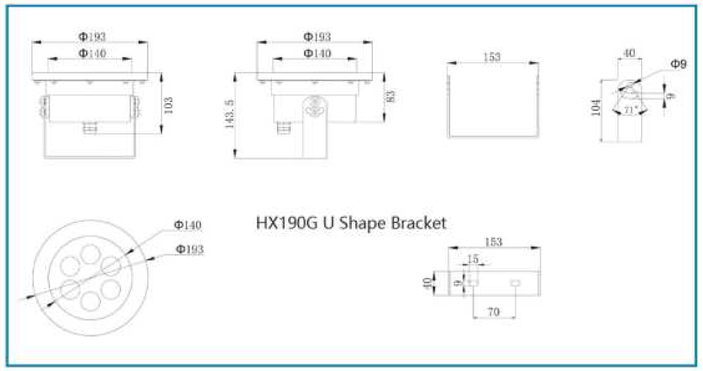

Technical Parameter

Model / Control Method	HX190G - 18*1W				HX190G - 24*1W				HX190G - 24*2W				HX190G - 12*3W (RGB)			
	DC12V	AC12V	DC24V	AC24V	DC12V	AC12V	DC24V	AC24V	DC12V	AC12V	DC24V	AC24V	DC12V	AC12V	DC24V	AC24V
Monochrome	✲	✲	✲	✲			✲	✲			✲	✲				
RGB (Internal Control)		✲		✲				✲				✲		✲		✲
RGB (External Control)	✲	✲	✲	✲			✲	✲			✲	✲	✲	✲	✲	✲
DMX512			✲	✲			✲	✲			✲	✲			✲	✲
Installation Method	Hoop Bracket/Clamp Type/ U Shape Bracket/Disc Type															
Weight Reference	2.0KG															

UNDERWATER LIGHTS

HX190G

Technical Parameter

Model / Control Method	HX190G - 12*4.5W (RGB)				HX190G - 12*6W (RGB)				HX190G - 18*3W (RGB)				HX190G - 8*6W (RGBW)			
	DC12V	AC12V	DC24V	AC24V	DC12V	AC12V	DC24V	AC24V	DC12V	AC12V	DC24V	AC24V	DC12V	AC12V	DC24V	AC24V
Monochrome																
RGB (Internal Control)																
RGB (External Control)			✲	✲			✲	✲			✲	✲			✲	
DMX512			✲	✲			✲	✲			✲	✲			✲	
Installation Method	Hoop Bracket/Clamp Type/ U Shape Bracket/Disc Type															
Weight Reference	2.0KG															

Model / Control Method	HX190G - 8*8W (RGBW)							
	DC12V	AC12V	DC24V	AC24V				
Monochrome								
RGB (Internal Control)								
RGB (External Control)								
DMX512			✲					
Installation Method	Hoop Bracket/Clamp Type/ U Shape Bracket/Disc Type							
Weight Reference	2.0KG							

HX215G

Equipment Exhibition

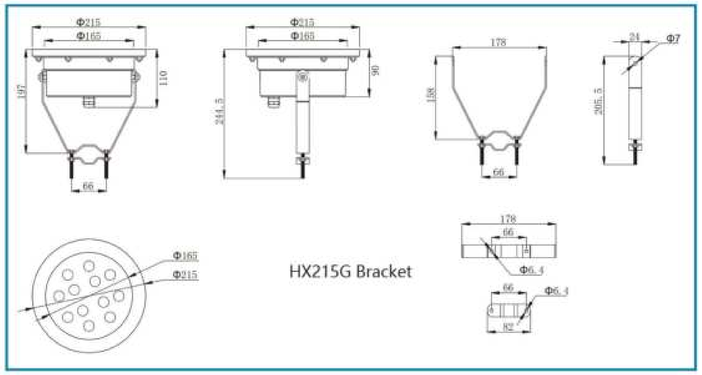

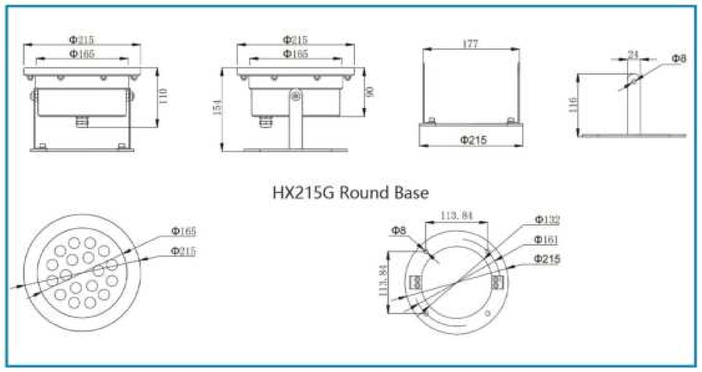

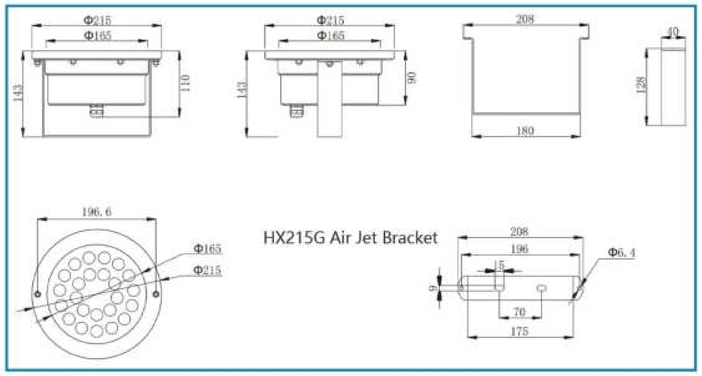

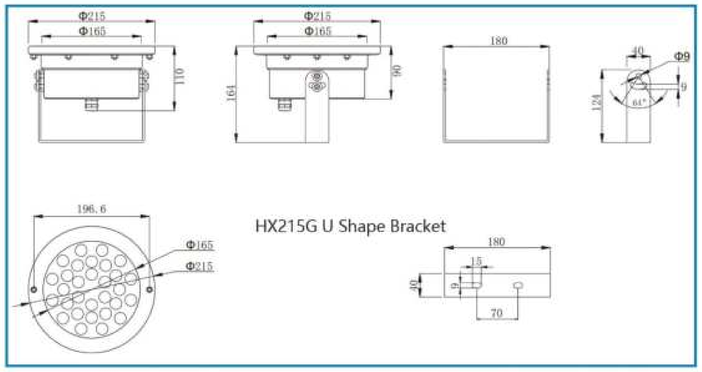

UNDERWATER LIGHTS

HX215G

Technical Parameter

Model / Control Method	HX215G - 24*1W				HX215G - 30*1W				HX215G - 18*3W (RGB)				HX215G - 24*3W (RGB)			
	DC12V	AC12V	DC24V	AC24V	DC12V	AC12V	DC24V	AC24V	DC12V	AC12V	DC24V	AC24V	DC12V	AC12V	DC24V	AC24V
Monochrome			✻	✻			✻	✻								
RGB (Internal Control)				✻				✻				✻				
RGB (External Control)			✻	✻			✻	✻			✻	✻			✻	✻
DMX512			✻	✻			✻	✻			✻	✻			✻	✻
Installation Method	Hoop Bracket/Clamp Type/ U Shape Bracket/Disc Type															
Weight Reference	2.5KG															

Model / Control Method	HX215G - 24*2W				HX215G - 30*2W				HX215G - 12*6W (RGBW)				HX215G - 12*8W (RGBW)			
	DC12V	AC12V	DC24V	AC24V	DC12V	AC12V	DC24V	AC24V	DC12V	AC12V	DC24V	AC24V	DC12V	AC12V	DC24V	AC24V
Monochrome																
RGB (Internal Control)																
RGB (External Control)			✻				✻				✻					
DMX512			✻				✻				✻				✻	
Installation Method	Hoop Bracket/Clamp Type/ U Shape Bracket/Disc Type															
Weight Reference	2.5KG															

HX232G

Equipment Exhibition

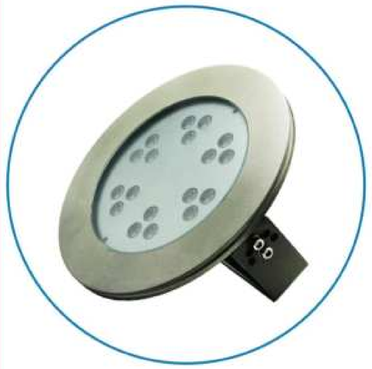

Product Size

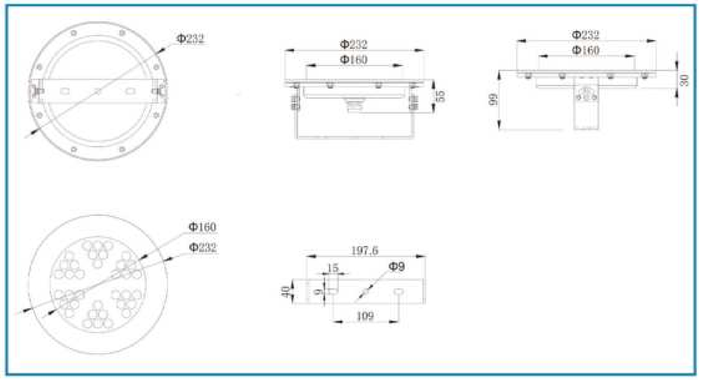

Technical Parameter

Control Method \ Model	HX232G - 18*1W				HX232G - 18*2W				HX232G - 18*3W				HX232G - 36*1W			
	DC12V	AC12V	DC24V	AC24V	DC12V	AC12V	DC24V	AC24V	DC12V	AC12V	DC24V	AC24V	DC12V	AC12V	DC24V	AC24V
Monochrome	✲	✲	✲	✲	✲	✲	✲	✲			✲	✲			✲	✲
RGB (Internal Control)																
RGB (External Control)	✲	✲	✲	✲	✲	✲	✲	✲			✲	✲			✲	✲
DMX512			✲				✲				✲				✲	
Installation Method	U Shape Bracket															
Weight Reference	3.2KG															

Control Method \ Model	HX232G - 36*1.5W				HX232G - 36*2W			
	DC12V	AC12V	DC24V	AC24V	DC12V	AC12V	DC24V	AC24V
Monochrome			✲					
RGB (Internal Control)								
RGB (External Control)			✲				✲	
DMX512			✲				✲	
Installation Method	U Shape Bracket							
Weight Reference	3.2KG							

HX250G

Equipment Exhibition

Product Size

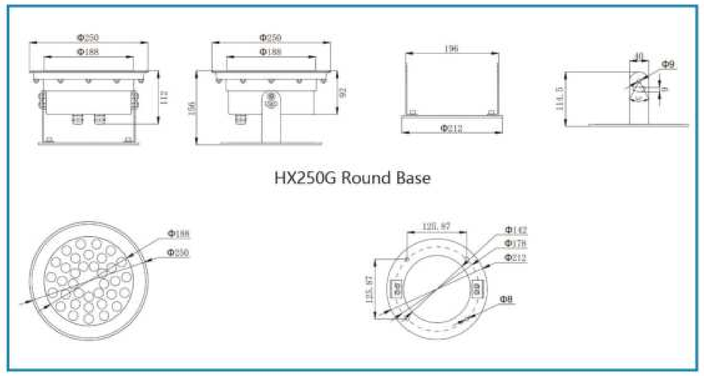

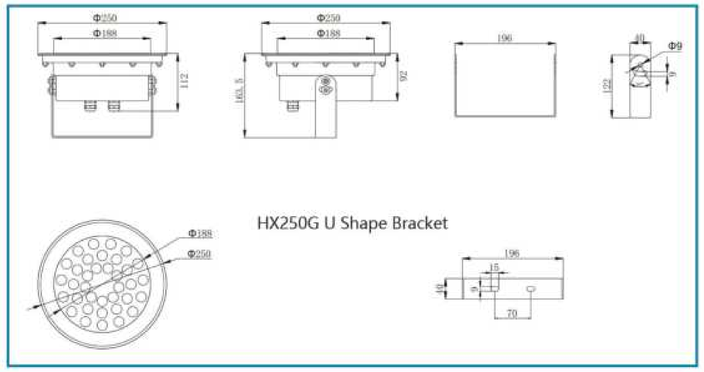

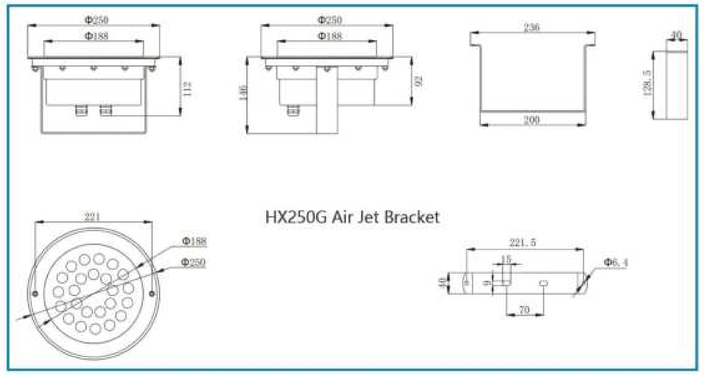

HX250G

Technical Parameter

Model / Control Method	HX250G - 24*3W (RGB)				HX250G - 36*3W (RGB)				HX250G - 18*6W (RGBW)				HX250G - 18*8W (RGBW)			
	DC12V	AC12V	DC24V	AC24V	DC12V	AC12V	DC24V	AC24V	DC12V	AC12V	DC24V	AC24V	DC12V	AC12V	DC24V	AC24V
Monochrome																
RGB (Internal Control)																
RGB (External Control)			*	*			*	*			*					
DMX512			*	*			*	*			*				*	
Installation Method	U Shape Bracket/Disc Base															
Weight Reference	3.7KG															

Model / Control Method	HX250G - 24*2W (RGBW)				HX250G - 36*2W (RGBW)			
	DC12V	AC12V	DC24V	AC24V	DC12V	AC12V	DC24V	AC24V
Monochrome				*				
RGB (Internal Control)								
RGB (External Control)			*	*			*	*
DMX512			*	*			*	*
Installation Method	U Shape Bracket/Disc Base							
Weight Reference	3.7KG							

HX300G

Equipment Exhibition

Product Size

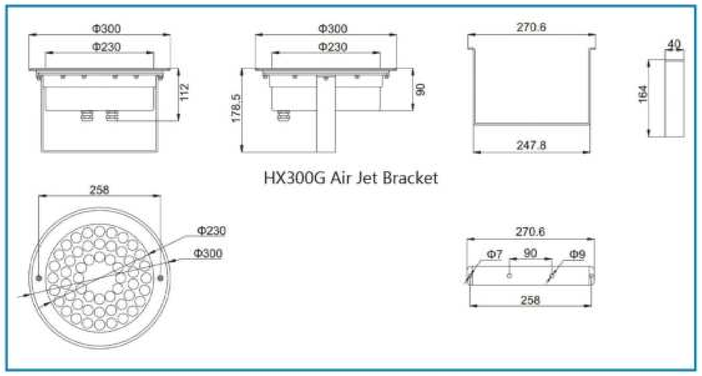

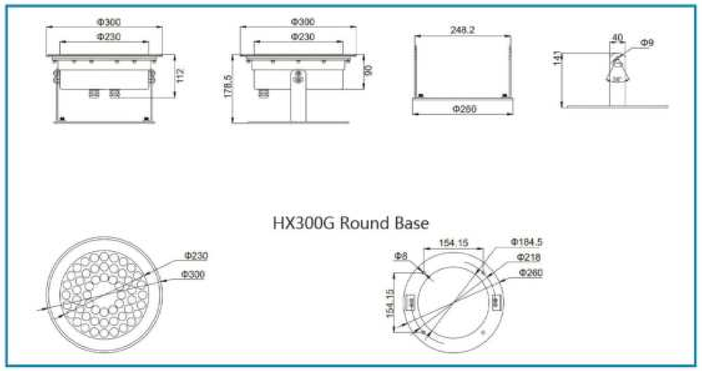

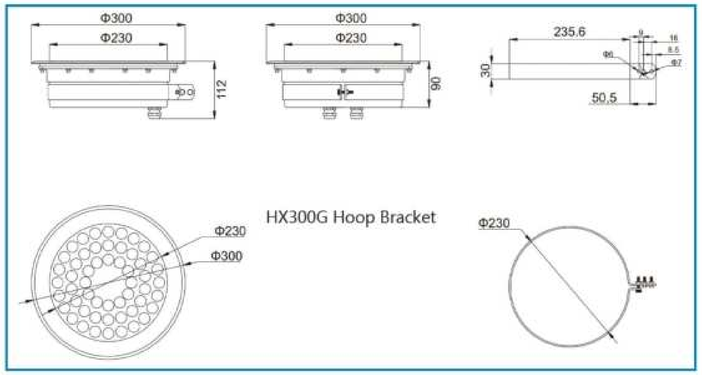

HX300G

Technical Parameter

Model / Control Method	HX300G - 48*2W				HX300G - 54*2W			
	DC12V	AC12V	DC24V	AC24V	DC12V	AC12V	DC24V	AC24V
Monochrome								
RGB (Internal Control)				✲				
RGB (External Control)			✲	✲			✲	
DMX512			✲	✲			✲	
Installation Method	Clamp Type/U Shape Bracket/Disc Base							
Weight Reference	6.0KG							

Model / Control Method	HX300G - 60*2W				HX300G - 24*6W (RGBW)				HX300G - 24*8W (RGBW)			
	DC12V	AC12V	DC24V	AC24V	DC12V	AC12V	DC24V	AC24V	DC12V	AC12V	DC24V	AC24V
Monochrome												
RGB (Internal Control)												
RGB (External Control)			✲				✲				✲	
DMX512			✲				✲				✲	
Installation Method	Clamp Type/U Shape Bracket/Disc Base											
Weight Reference	6.0KG											

UNDERWATER LIGHTS

HX390G

Equipment Exhibition

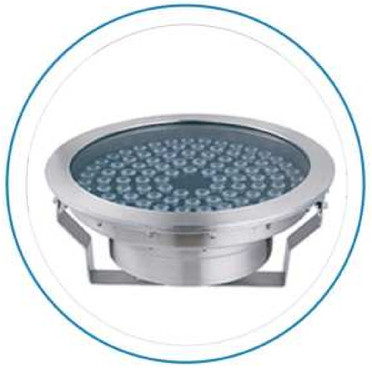

Product Size

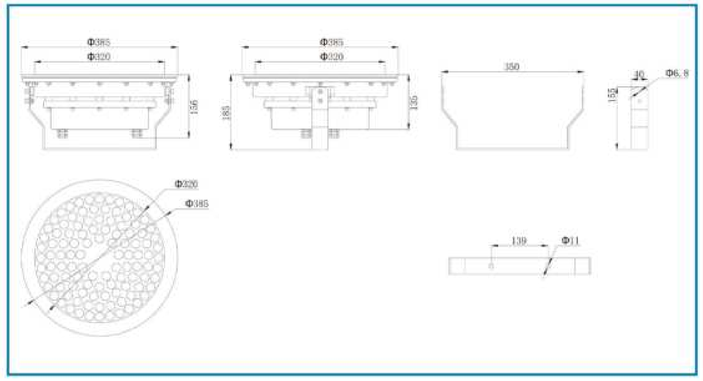

Technical Parameter

Model / Control Method	HX390G - 72*3W (RGB)				HX390G - 36*6W (RGBW)			
	DC12V	AC12V	DC24V	AC24V	DC12V	AC12V	DC24V	AC24V
Monochrome								
RGB (Internal Control)								
RGB (External Control)	✲	✲	✲	✲			✲	✲
DMX512	✲	✲	✲	✲			✲	
Installation Method	U Shape Bracket							
Weight Reference	8.0KG							

Model / Control Method	HX390G - 36*8W (RGBW)				HX390G - 72*2W				HX390G - 108*2W			
	DC12V	AC12V	DC24V	AC24V	DC12V	AC12V	DC24V	AC24V	DC12V	AC12V	DC24V	AC24V
Monochrome												
RGB (Internal Control)												
RGB (External Control)			✲	✲			✲	✲			✲	✲
DMX512			✲				✲				✲	
Installation Method	U Shape Bracket											
Weight Reference	8.0KG											

HX150GMK

Equipment Exhibition

Product Size

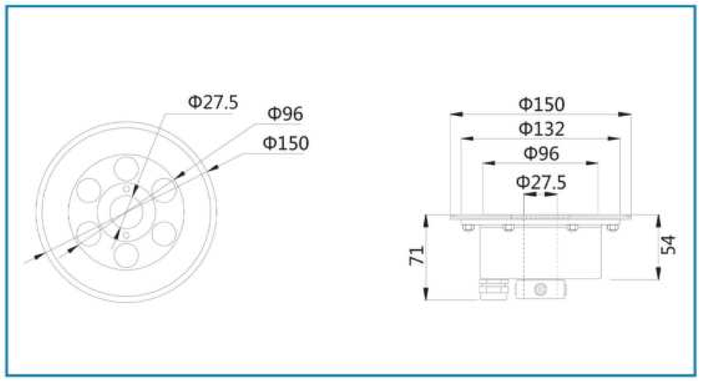

Technical Parameter

Model / Control Method	HX150GMK - 6*1W				HX150GMK - 3*3W (RGB)			
	DC12V	AC12V	DC24V	AC24V	DC12V	AC12V	DC24V	AC24V
Monochrome	✻		✻		✻		✻	
RGB (Internal Control)								
RGB (External Control)	✻		✻		✻		✻	
DMX512			✻				✻	
Centre Hole Recommended Cut Out Size	25mm Φ135mm							
Weight Reference	1.5KG							

HX170GK

Equipment Exhibition

Product Size

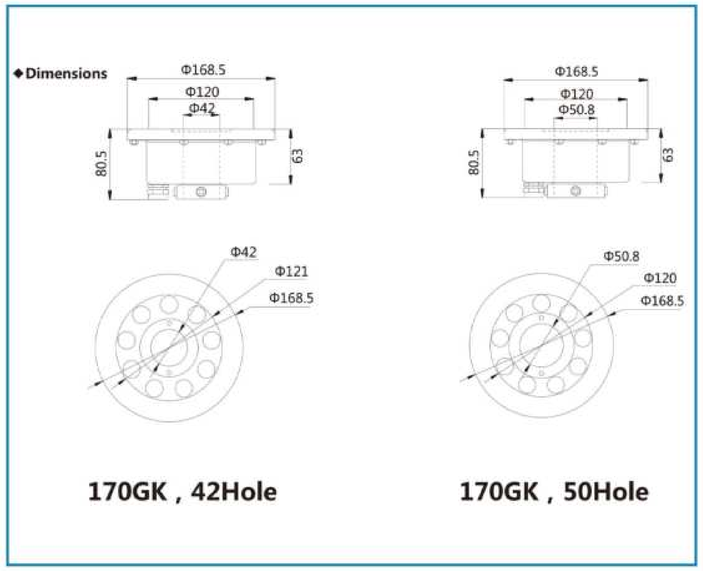

Technical Parameter

Model / Control Method	HX170GK - 6*1W				HX170GK - 9*1W				HX170GK - 12*1W				HX170GK - 9*2W			
	DC12V	AC12V	DC24V	AC24V	DC12V	AC12V	DC24V	AC24V	DC12V	AC12V	DC24V	AC24V	DC12V	AC12V	DC24V	AC24V
Monochrome	✻	✻	✻	✻	✻	✻	✻	✻	✻	✻	✻	✻	✻	✻	✻	✻
RGB (Internal Control)		✻		✻		✻		✻		✻		✻		✻		✻
RGB (External Control)	✻	✻	✻	✻	✻	✻	✻	✻	✻	✻	✻	✻		✻	✻	✻
DMX512			✻				✻				✻				✻	✻
Centre Hole	42mm 50mm															
Weight Reference	1.8KG															

Model / Control Method	HX170GK - 12*2W				HX170GK - 6*3W (RGB)				HX170GK - 12*3W (RGB)				HX170GK - 6*4W (RGBW)			
	DC12V	AC12V	DC24V	AC24V	DC12V	AC12V	DC24V	AC24V	DC12V	AC12V	DC24V	AC24V	DC12V	AC12V	DC24V	AC24V
Monochrome																
RGB (Internal Control)				✻				✻		✻		✻				
RGB (External Control)			✻	✻			✻	✻	✻	✻	✻	✻			✻	✻
DMX512			✻	✻			✻	✻			✻	✻			✻	
Centre Hole	42mm 50mm															
Weight Reference	1.8KG															

HX180GMK

Equipment Exhibition

Product Size

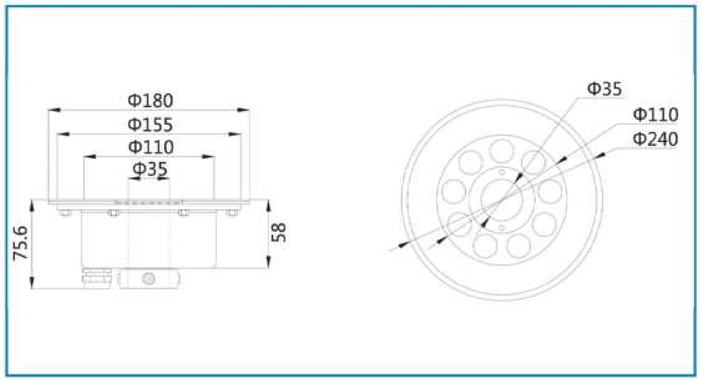

Technical Parameter

Control Method \ Model	HX180GMK - 6*1W				HX180GMK - 9*1W				HX180GMK - 6*2W				HX180GMK - 4*3W (RGB)			
	DC12V	AC12V	DC24V	AC24V	DC12V	AC12V	DC24V	AC24V	DC12V	AC12V	DC24V	AC24V	DC12V	AC12V	DC24V	AC24V
Monochrome	✲	✲	✲	✲	✲	✲	✲	✲	✲	✲	✲	✲				
RGB (Internal Control)		✲		✲		✲		✲		✲		✲				✲
RGB (External Control)	✲	✲	✲	✲	✲	✲	✲	✲	✲	✲	✲	✲			✲	✲
DMX512			✲				✲				✲				✲	
Centre Hole Recommended Cut Out Size	35mm Φ160mm															
Weight Reference	3.0KG															

Control Method \ Model	HX180GMK - 6*3W (RGB)				HX180GMK - 6*3W (RGBW)			
	DC12V	AC12V	DC24V	AC24V	DC12V	AC12V	DC24V	AC24V
Monochrome								
RGB (Internal Control)				✲		✲		✲
RGB (External Control)			✲	✲	✲	✲	✲	✲
DMX512			✲				✲	
Centre Hole Recommended Cut Out Size	35mm Φ160mm							
Weight Reference	3.0KG							

HX190GK

Equipment Exhibition

Product Size

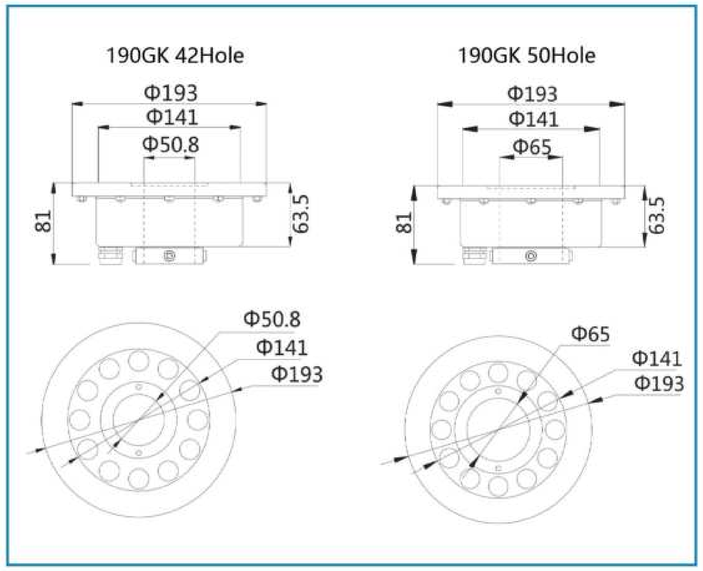

Technical Parameter

Control Method \ Model	HX190GK - 9*1W				HX190GK - 12*1W				HX190GK - 9*2W				HX190GK - 12*2W			
	DC12V	AC12V	DC24V	AC24V	DC12V	AC12V	DC24V	AC24V	DC12V	AC12V	DC24V	AC24V	DC12V	AC12V	DC24V	AC24V
Monochrome	✲	✲	✲	✲	✲	✲	✲	✲	✲	✲	✲	✲				
RGB (Internal Control)		✲		✲		✲		✲		✲		✲				✲
RGB (External Control)	✲	✲	✲	✲	✲	✲	✲	✲	✲	✲	✲	✲			✲	✲
DMX512			✲				✲				✲				✲	✲
Centre Hole	55mm 65mm															
Weight Reference	3.0KG															

Control Method \ Model	HX190GK - 6*3W (RGB)				HX190GK - 12*3W (RGB)				HX190GK - 6*4W (RGBW)				HX190GK - 6*6W (RGBW)			
	DC12V	AC12V	DC24V	AC24V	DC12V	AC12V	DC24V	AC24V	DC12V	AC12V	DC24V	AC24V	DC12V	AC12V	DC24V	AC24V
Monochrome																
RGB (Internal Control)		✲		✲		✲		✲								
RGB (External Control)	✲	✲	✲	✲	✲	✲	✲	✲	✲	✲	✲	✲	✲	✲	✲	✲
DMX512			✲	✲			✲	✲			✲				✲	
Centre Hole	55mm 65mm															
Weight Reference	3.0KG															

HX200GMK

Equipment Exhibition

Product Size

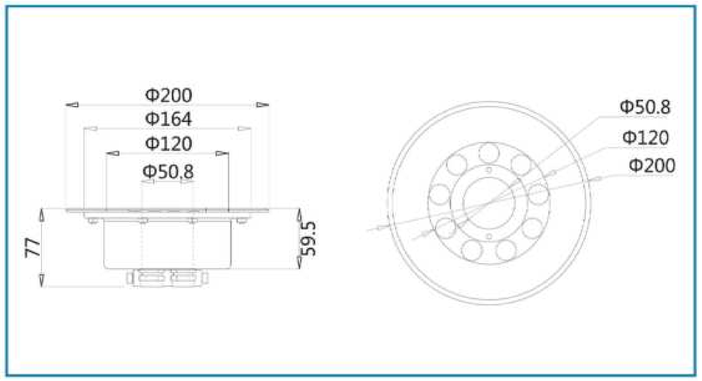

Technical Parameter

Control Method \ Model	HX200GMK - 6*1W				HX200GMK - 9*1W				HX200GMK - 12*1W				HX200GMK - 12*2W			
	DC12V	AC12V	DC24V	AC24V	DC12V	AC12V	DC24V	AC24V	DC12V	AC12V	DC24V	AC24V	DC12V	AC12V	DC24V	AC24V
Monochrome	✲	✲	✲	✲	✲	✲	✲	✲	✲	✲	✲	✲				
RGB (Internal Control)		✲		✲		✲		✲		✲		✲				✲
RGB (External Control)	✲	✲	✲	✲	✲	✲	✲	✲	✲	✲	✲	✲			✲	✲
DMX512			✲				✲				✲				✲	✲
Centre Hole Recommended Cut Out Size	35mm Φ160mm															
Weight Reference	2.0KG															

Control Method \ Model	HX200GMK - 9*2W				HX200GMK - 6*3W (RGB)			
	DC12V	AC12V	DC24V	AC24V	DC12V	AC12V	DC24V	AC24V
Monochrome	✲	✲	✲	✲				
RGB (Internal Control)		✲		✲		✲		✲
RGB (External Control)	✲	✲	✲	✲	✲	✲	✲	✲
DMX512			✲	✲			✲	✲
Centre Hole Recommended Cut Out Size	35mm Φ160mm							
Weight Reference	2.0KG							

HX200GMKH

Equipment Exhibition

Product Size

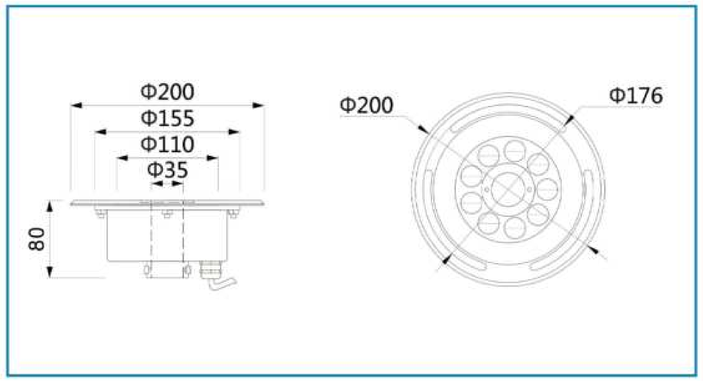

Technical Parameter

Control Method \ Model	HX200GMKH - 6*1W				HX200GMKH - 9*1W				HX200GMKH - 6*2W				HX200GMKH - 4*3W (RGB)			
	DC12V	AC12V	DC24V	AC24V	DC12V	AC12V	DC24V	AC24V	DC12V	AC12V	DC24V	AC24V	DC12V	AC12V	DC24V	AC24V
Monochrome	✲	✲	✲	✲	✲	✲	✲	✲	✲	✲	✲	✲				
RGB (Internal Control)		✲		✲		✲		✲		✲		✲				✲
RGB (External Control)	✲	✲	✲	✲	✲	✲	✲	✲	✲	✲	✲	✲			✲	✲
DMX512			✲				✲				✲				✲	
Centre Hole Recommended Cut Out Size	35mm Φ180mm															
Weight Reference	3.0KG															

Control Method \ Model	HX200GMKH - 6*3W (RGB)				HX200GMKH - 6*3W (RGBW)			
	DC12V	AC12V	DC24V	AC24V	DC12V	AC12V	DC24V	AC24V
Monochrome								
RGB (Internal Control)				✲		✲		✲
RGB (External Control)			✲	✲	✲	✲	✲	✲
DMX512			✲				✲	
Centre Hole Recommended Cut Out Size	35mm Φ180mm							
Weight Reference	3.0KG							

HX215GK

Equipment Exhibition

Product Size

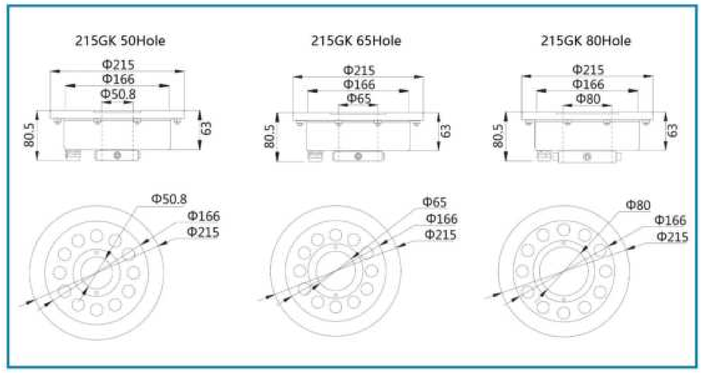

Technical Parameter

Model / Control Method	HX215GK - 12*1W				HX215GK - 18*1W				HX215GK - 12*2W				HX215GK - 18*2W			
	DC12V	AC12V	DC24V	AC24V	DC12V	AC12V	DC24V	AC24V	DC12V	AC12V	DC24V	AC24V	DC12V	AC12V	DC24V	AC24V
Monochrome	*	*	*	*	*	*	*	*	*	*	*	*			*	*
RGB (Internal Control)		*		*		*		*		*		*				*
RGB (External Control)	*	*	*	*	*	*	*	*	*	*	*	*			*	*
DMX512			*				*	*			*	*			*	*
Centre Hole	50mm/65mm/80mm															
Weight Reference	4.5KG															

Model / Control Method	HX215GK - 9*3W (RGB)				HX215GK - 12*3W (RGB)				HX215GK - 6*4W (RGBW)				HX215GK - 6*6W (RGBW)			
	DC12V	AC12V	DC24V	AC24V	DC12V	AC12V	DC24V	AC24V	DC12V	AC12V	DC24V	AC24V	DC12V	AC12V	DC24V	AC24V
Monochrome																
RGB (Internal Control)				*				*								
RGB (External Control)			*	*			*	*			*	*			*	*
DMX512			*				*	*			*				*	
Centre Hole	50mm/65mm/80mm															
Weight Reference	4.5KG															

HX220GMK

Equipment Exhibition

Product Size

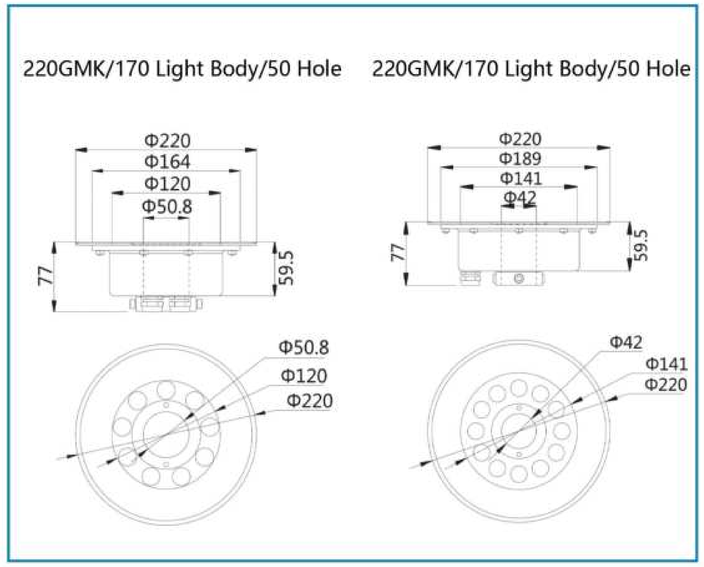

Technical Parameter

Model / Control Method	HX220GMK - 9*1W				HX220GMK - 12*1W				HX220GMK - 9*2W				HX220GMK - 12*2W			
	DC12V	AC12V	DC24V	AC24V	DC12V	AC12V	DC24V	AC24V	DC12V	AC12V	DC24V	AC24V	DC12V	AC12V	DC24V	AC24V
Monochrome	*	*	*	*	*	*	*	*	*	*	*	*				
RGB (Internal Control)		*		*		*		*		*		*				*
RGB (External Control)	*	*	*	*	*	*	*	*	*	*	*	*			*	*
DMX512			*				*				*				*	*
Centre Hole Recommended Cut Out Size	50mm/65mm Φ220mm															
Weight Reference	3.0KG															

Model / Control Method	HX220GMK - 6*3W (RGB)				HX220GMK - 12*3W (RGB)				HX220GMK - 6*4W (RGBW)				HX220GMK - 6*6W (RGBW)			
	DC12V	AC12V	DC24V	AC24V	DC12V	AC12V	DC24V	AC24V	DC12V	AC12V	DC24V	AC24V	DC12V	AC12V	DC24V	AC24V
Monochrome																
RGB (Internal Control)		*		*		*		*								
RGB (External Control)	*	*	*	*	*	*	*	*			*	*			*	*
DMX512			*	*			*	*			*				*	
Centre Hole Recommended Cut Out Size	50mm/65mm Φ220mm															
Weight Reference	3.0KG															

HX220GMKH

Equipment Exhibition

Product Size

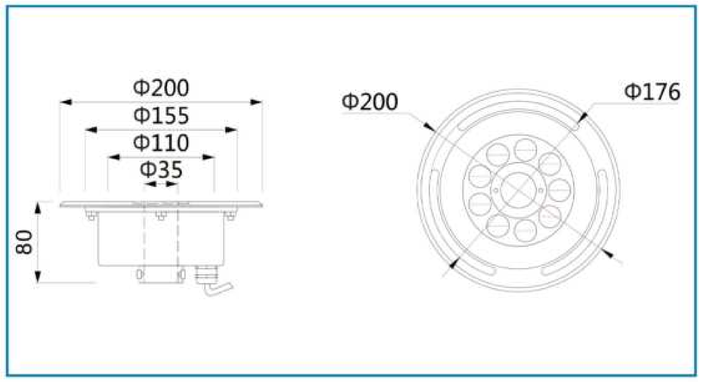

Technical Parameter

Model / Control Method	HX220GMKH - 6*1W				HX220GMKH - 9*1W				HX220GMKH - 6*2W				HX220GMKH - 4*3W (RGB)			
	DC12V	AC12V	DC24V	AC24V	DC12V	AC12V	DC24V	AC24V	DC12V	AC12V	DC24V	AC24V	DC12V	AC12V	DC24V	AC24V
Monochrome	✲	✲	✲	✲	✲	✲	✲	✲	✲	✲	✲	✲				
RGB (Internal Control)		✲		✲		✲		✲		✲		✲				✲
RGB (External Control)	✲	✲	✲	✲	✲	✲	✲	✲	✲	✲	✲	✲			✲	✲
DMX512			✲				✲				✲				✲	
Centre Hole Recommended Cut Out Size	35mm Φ190mm															
Weight Reference	3.0KG															

Model / Control Method	HX220GMKH - 6*3W (RGB)				HX220GMKH - 6*3W (RGBW)			
	DC12V	AC12V	DC24V	AC24V	DC12V	AC12V	DC24V	AC24V
Monochrome								
RGB (Internal Control)				✲		✲		✲
RGB (External Control)			✲	✲	✲	✲	✲	✲
DMX512			✲				✲	
Centre Hole Recommended Cut Out Size	35mm Φ190mm							
Weight Reference	3.0KG							

HX230GMKH

Equipment Exhibition

Product Size

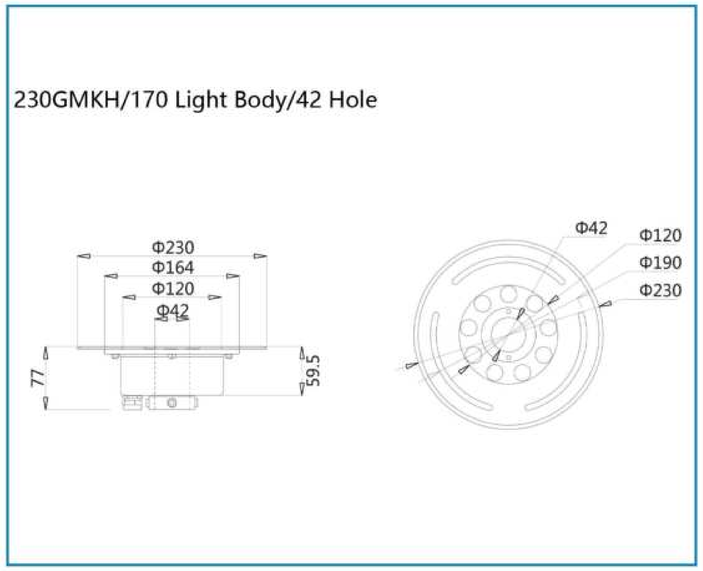

Technical Parameter

Model / Control Method	HX230GMKH - 6*1W				HX230GMKH - 9*1W				HX230GMKH - 12*1W				HX230GMKH - 12*2W			
	DC12V	AC12V	DC24V	AC24V	DC12V	AC12V	DC24V	AC24V	DC12V	AC12V	DC24V	AC24V	DC12V	AC12V	DC24V	AC24V
Monochrome	✲	✲	✲	✲	✲	✲	✲	✲	✲	✲	✲	✲				
RGB (Internal Control)		✲		✲		✲		✲		✲		✲				✲
RGB (External Control)	✲	✲	✲	✲	✲	✲	✲	✲	✲	✲	✲	✲			✲	✲
DMX512			✲				✲				✲				✲	✲
Centre Hole Recommended Cut Out Size	42mm/50mm Φ210mm															
Weight Reference	3.0KG															

Model / Control Method	HX200GMKH - 6*3W (RGB)				HX200GMKH - 6*3W (RGBW)			
	DC12V	AC12V	DC24V	AC24V	DC12V	AC12V	DC24V	AC24V
Monochrome	✲	✲	✲	✲				
RGB (Internal Control)		✲		✲		✲		✲
RGB (External Control)	✲	✲	✲	✲	✲	✲	✲	✲
DMX512			✲	✲			✲	
Centre Hole Recommended Cut Out Size	42mm/50mm Φ210mm							
Weight Reference	3.0KG							

HX240GMK

Equipment Exhibition

Product Size

240GMK/215 Light Body/65 Hole

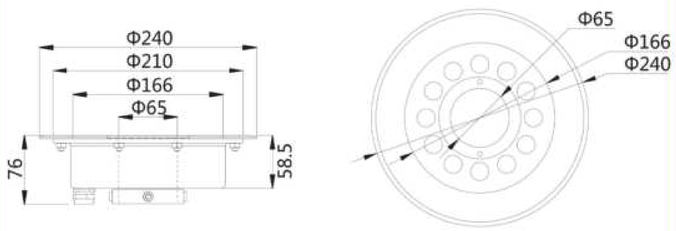

Technical Parameter

Model / Control Method	HX240GMK - 12*1W				HX240GMK - 18*1W				HX240GMK - 9*2W				HX240GMK - 12*2W			
	DC12V	AC12V	DC24V	AC24V	DC12V	AC12V	DC24V	AC24V	DC12V	AC12V	DC24V	AC24V	DC12V	AC12V	DC24V	AC24V
Monochrome	✲	✲	✲	✲			✲	✲			✲	✲				
RGB (Internal Control)		✲		✲				✲				✲				✲
RGB (External Control)	✲	✲	✲	✲			✲	✲			✲	✲			✲	✲
DMX512			✲				✲	✲			✲	✲			✲	✲
Centre Hole Recommended Cut Out Size	50mm/65mm/80mm Φ220mm															
Weight Reference	3.5KG															

Model / Control Method	HX240GMK - 18*2W				HX240GMK - 12*3W (RGB)				HX240GMK - 6*4W (RGB)				HX240GMK - 6*6W (RGBW)			
	DC12V	AC12V	DC24V	AC24V	DC12V	AC12V	DC24V	AC24V	DC12V	AC12V	DC24V	AC24V	DC12V	AC12V	DC24V	AC24V
Monochrome																
RGB (Internal Control)				✲								✲				
RGB (External Control)	✲		✲	✲			✲	✲			✲	✲			✲	✲
DMX512			✲	✲			✲	✲			✲				✲	
Centre Hole Recommended Cut Out Size	50mm/65mm/80mm Φ220mm															
Weight Reference	3.5KG															

HX240GMKH

Equipment Exhibition

Product Size

240GMKH/170 Light Body/42 Hole

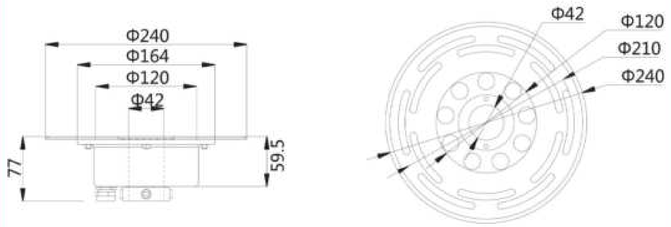

Technical Parameter

Model / Control Method	HX240GMKH - 6*1W				HX240GMKH - 9*1W				HX240GMKH - 12*1W				HX240GMKH - 12*2W			
	DC12V	AC12V	DC24V	AC24V	DC12V	AC12V	DC24V	AC24V	DC12V	AC12V	DC24V	AC24V	DC12V	AC12V	DC24V	AC24V
Monochrome	✲	✲	✲	✲	✲	✲	✲	✲	✲	✲	✲	✲				
RGB (Internal Control)		✲		✲		✲		✲		✲		✲				✲
RGB (External Control)	✲	✲	✲	✲	✲	✲	✲	✲	✲	✲	✲	✲			✲	✲
DMX512			✲				✲				✲				✲	✲
Centre Hole Recommended Cut Out Size	42mm/50mm Φ210mm															
Weight Reference	3.0KG															

Model / Control Method	HX200GMKH - 6*3W (RGB)				HX200GMKH - 6*3W (RGBW)			
	DC12V	AC12V	DC24V	AC24V	DC12V	AC12V	DC24V	AC24V
Monochrome	✲	✲	✲	✲				
RGB (Internal Control)		✲		✲		✲		✲
RGB (External Control)	✲	✲	✲	✲	✲	✲	✲	✲
DMX512			✲	✲			✲	✲
Centre Hole Recommended Cut Out Size	42mm/50mm Φ210mm							
Weight Reference	3.0KG							

HX250GK

Equipment Exhibition

Product Size

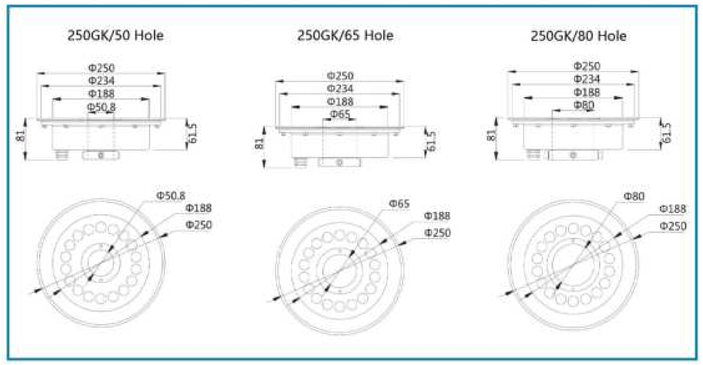

Technical Parameter

Model / Control Method	HX250GK - 18*1W				HX250GK - 24*1W				HX250GK - 18*2W				HX250GK - 24*2W			
	DC12V	AC12V	DC24V	AC24V	DC12V	AC12V	DC24V	AC24V	DC12V	AC12V	DC24V	AC24V	DC12V	AC12V	DC24V	AC24V
Monochrome	✲	✲	✲	✲			✲	✲	✲	✲	✲	✲				
RGB (Internal Control)		✲		✲				✲		✲		✲				✲
RGB (External Control)	✲	✲	✲	✲			✲	✲	✲	✲	✲	✲			✲	✲
DMX512			✲	✲			✲	✲			✲	✲			✲	✲
Centre Hole	50mm/65mm/80mm															
Weight Reference	4.5KG															

Model / Control Method	HX250GK - 10*6W (RGBW)			
	DC12V	AC12V	DC24V	AC24V
Monochrome				
RGB (Internal Control)				
RGB (External Control)			✲	✲
DMX512			✲	
Centre Hole	50mm/65mm/80mm			
Weight Reference	4.5KG			

HX260GMK

Equipment Exhibition

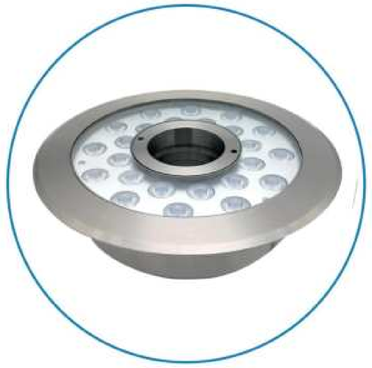

Product Size

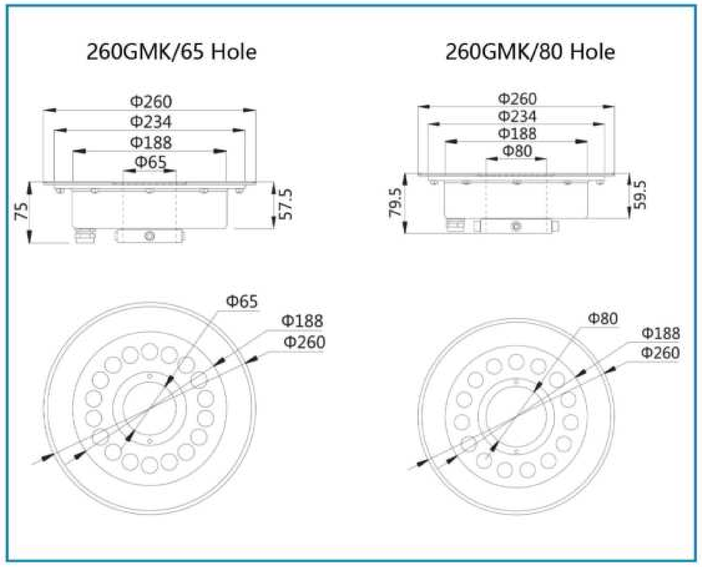

Technical Parameter

Model / Control Method	HX260GMK - 18*1W				HX260GMK - 24*1W				HX260GMK - 18*2W				HX260GMK - 24*2W			
	DC12V	AC12V	DC24V	AC24V	DC12V	AC12V	DC24V	AC24V	DC12V	AC12V	DC24V	AC24V	DC12V	AC12V	DC24V	AC24V
Monochrome	✲	✲	✲	✲			✲	✲			✲	✲				
RGB (Internal Control)		✲		✲				✲				✲				
RGB (External Control)	✲	✲	✲	✲			✲	✲			✲	✲			✲	✲
DMX512			✲	✲			✲	✲			✲	✲			✲	✲
Centre Hole Recommended Cut Out Size	65mm/80mm Φ240mm															
Weight Reference	4.5KG															

Model / Control Method	HX260GMK - 12*3W (RGB)				HX260GMK - 18*3W (RGB)				HX260GMK - 10*6W (RGBW)			
	DC12V	AC12V	DC24V	AC24V	DC12V	AC12V	DC24V	AC24V	DC12V	AC12V	DC24V	AC24V
Monochrome												
RGB (Internal Control)								✲				
RGB (External Control)	✲		✲	✲			✲	✲			✲	✲
DMX512			✲	✲			✲	✲			✲	
Centre Hole Recommended Cut Out Size	65mm/80mm Φ240mm											
Weight Reference	4.5KG											

HX270GMKH

Equipment Exhibition

Product Size

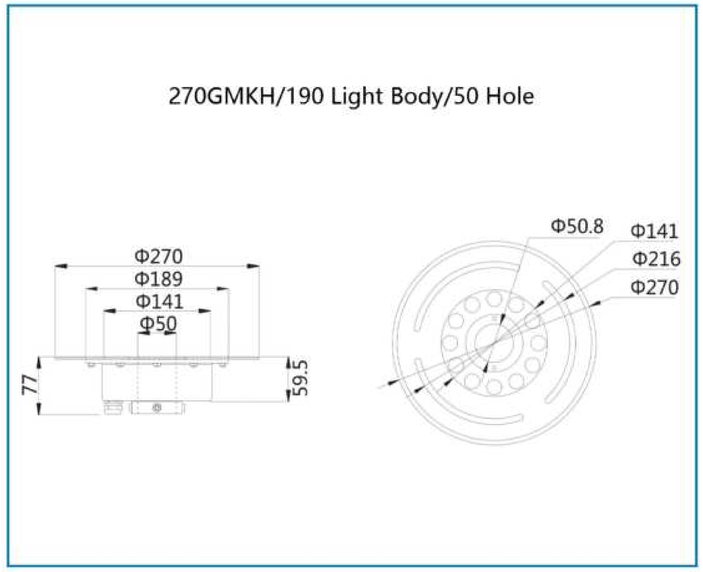

Technical Parameter

Model / Control Method	HX270GMKH - 9*1W				HX270GMKH - 12*1W				HX270GMKH - 9*2W				HX270GMKH - 12*2W			
	DC12V	AC12V	DC24V	AC24V	DC12V	AC12V	DC24V	AC24V	DC12V	AC12V	DC24V	AC24V	DC12V	AC12V	DC24V	AC24V
Monochrome	*	*	*	*	*	*	*	*	*	*	*	*				
RGB (Internal Control)		*		*		*		*		*		*				*
RGB (External Control)	*	*	*	*	*	*	*	*	*	*	*	*			*	*
DMX512			*				*				*				*	*
Centre Hole Recommended Cut Out Size	50mm/65mm Φ230mm															
Weight Reference	4.0KG															

Model / Control Method	HX270GMKH - 6*3W (RGB)				HX270GMKH - 12*3W (RGB)				HX270GMKH - 6*4W (RGBW)				HX270GMKH - 6*6W (RGBW)			
	DC12V	AC12V	DC24V	AC24V	DC12V	AC12V	DC24V	AC24V	DC12V	AC12V	DC24V	AC24V	DC12V	AC12V	DC24V	AC24V
Monochrome																
RGB (Internal Control)		*		*		*		*								
RGB (External Control)	*	*	*	*	*	*	*	*			*	*			*	*
DMX512			*	*			*	*			*				*	
Centre Hole Recommended Cut Out Size	50mm/65mm Φ230mm															
Weight Reference	4.0KG															

HX300GMKH

Equipment Exhibition

Product Size

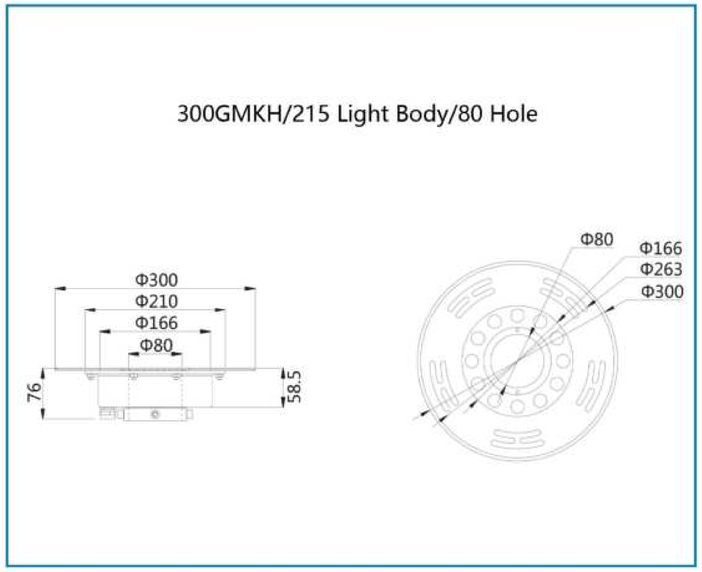

Technical Parameter

Model / Control Method	HX300GMKH - 12*1W				HX300GMKH - 18*1W				HX300GMKH - 9*2W				HX300GMKH - 12*2W			
	DC12V	AC12V	DC24V	AC24V	DC12V	AC12V	DC24V	AC24V	DC12V	AC12V	DC24V	AC24V	DC12V	AC12V	DC24V	AC24V
Monochrome	*	*	*	*			*	*			*	*				
RGB (Internal Control)		*		*				*				*				*
RGB (External Control)	*	*	*	*			*	*			*	*			*	*
DMX512			*				*	*			*	*			*	*
Centre Hole Recommended Cut Out Size	50mm/65mm/80mm Φ270mm															
Weight Reference	6.5KG															

Model / Control Method	HX300GMKH - 18*2W				HX300GMKH - 12*3W (RGB)				HX300GMKH - 6*4W (RGBW)				HX300GMKH - 6*6W (RGBW)			
	DC12V	AC12V	DC24V	AC24V	DC12V	AC12V	DC24V	AC24V	DC12V	AC12V	DC24V	AC24V	DC12V	AC12V	DC24V	AC24V
Monochrome																
RGB (Internal Control)				*								*				
RGB (External Control)			*	*			*	*			*	*			*	*
DMX512			*	*			*	*			*				*	
Centre Hole Recommended Cut Out Size	50mm/65mm/80mm Φ270mm															
Weight Reference	4.0KG															

HX130ZK

Equipment Exhibition

Product Size

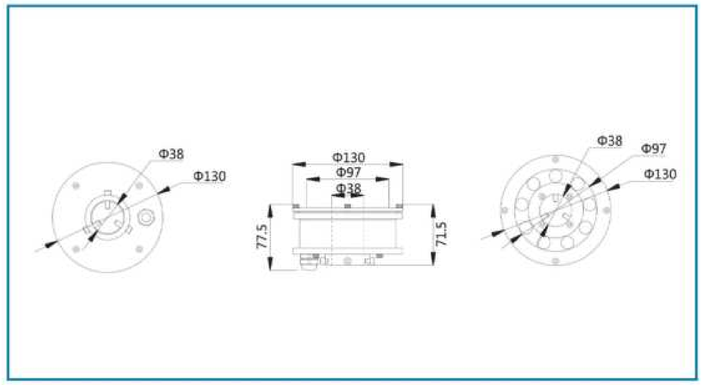

Technical Parameter

Model / Control Method	HX130ZK - 3*1W				HX130ZK - 6*1W				HX130ZK - 9*1W				HX130ZK - 3*3W (RGB)			
	DC12V	AC12V	DC24V	AC24V	DC12V	AC12V	DC24V	AC24V	DC12V	AC12V	DC24V	AC24V	DC12V	AC12V	DC24V	AC24V
Monochrome	*	*	*	*	*	*	*	*	*	*	*	*				
RGB (Internal Control)		*		*		*		*		*		*				*
RGB (External Control)	*	*	*	*	*	*	*	*	*	*	*	*			*	*
DMX512			*				*				*				*	
Centre Hole	Φ38mm															
Weight Reference	1.5KG															

HX160ZK

Equipment Exhibition

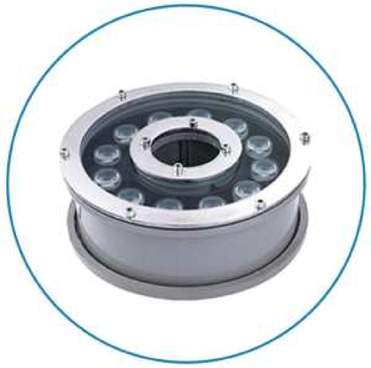

Product Size

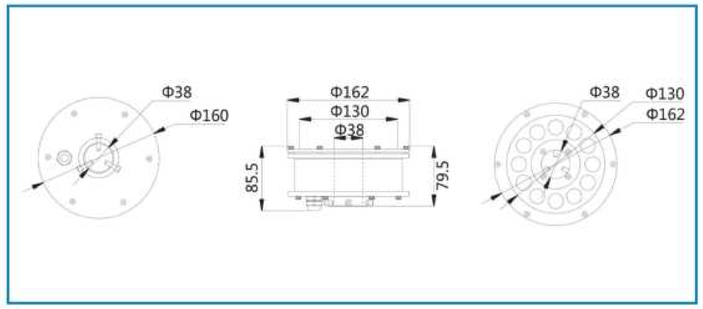

Technical Parameter

Model / Control Method	HX160ZK - 6*1W				HX160ZK - 9*1W				HX160ZK - 12*1W				HX160ZK - 6*2W			
	DC12V	AC12V	DC24V	AC24V	DC12V	AC12V	DC24V	AC24V	DC12V	AC12V	DC24V	AC24V	DC12V	AC12V	DC24V	AC24V
Monochrome	*	*	*	*	*	*	*	*	*	*	*	*	*	*	*	*
RGB (Internal Control)		*		*		*		*		*		*		*		*
RGB (External Control)	*	*	*	*	*	*	*	*	*	*	*	*	*	*	*	*
DMX512			*				*				*				*	
Centre Hole	Φ38mm															
Weight Reference	2.0KG															

Model / Control Method	HX160ZK - 9*2W				HX160ZK - 3*4W (RGB)				HX160ZK - 6*3W (RGB)			
	DC12V	AC12V	DC24V	AC24V	DC12V	AC12V	DC24V	AC24V	DC12V	AC12V	DC24V	AC24V
Monochrome	*	*	*	*								
RGB (Internal Control)		*		*				*		*		*
RGB (External Control)	*	*	*	*			*	*			*	*
DMX512			*	*			*				*	*
Centre Hole	Φ38mm											
Weight Reference	2.0KG											

HX160ZMK

Equipment Exhibition

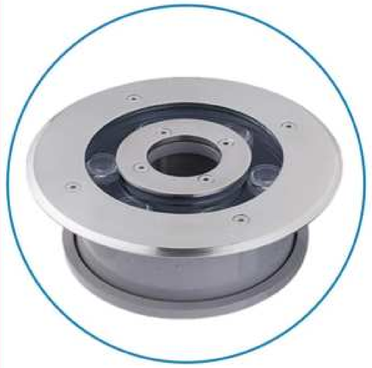

Product Size

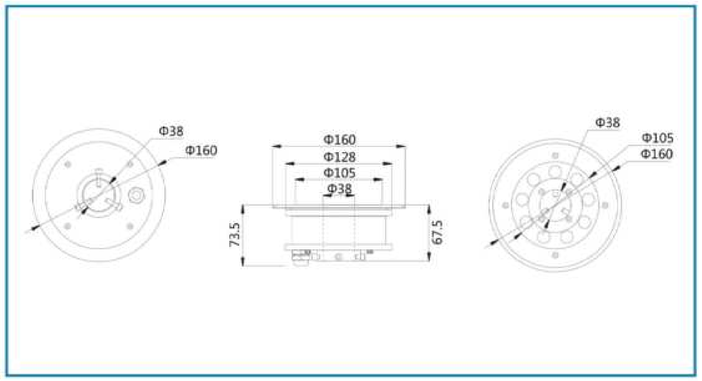

Technical Parameter

Model / Control Method	HX160ZMK - 6*1W				HX160ZMK - 9*1W			
	DC12V	AC12V	DC24V	AC24V	DC12V	AC12V	DC24V	AC24V
Monochrome	✲	✲	✲	✲	✲	✲	✲	✲
RGB (Internal Control)		✲		✲		✲		✲
RGB (External Control)	✲	✲	✲	✲	✲	✲	✲	✲
DMX512			✲				✲	
Centre Hole Recommended Cut Out Size	Φ38mm Φ140mm							
Weight Reference	2.0KG							

HX180ZK

Equipment Exhibition

Product Size

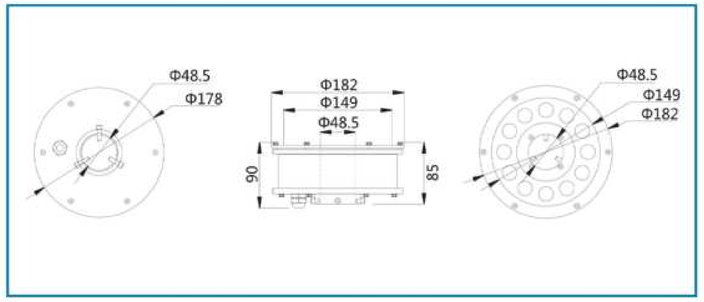

Technical Parameter

Model / Control Method	HX180ZK - 9*1W				HX180ZK - 12*1W				HX180ZK - 15*1W				HX180ZK - 9*2W			
	DC12V	AC12V	DC24V	AC24V	DC12V	AC12V	DC24V	AC24V	DC12V	AC12V	DC24V	AC24V	DC12V	AC12V	DC24V	AC24V
Monochrome	✲	✲	✲	✲	✲	✲	✲	✲	✲	✲	✲	✲	✲	✲	✲	✲
RGB (Internal Control)		✲		✲		✲		✲		✲		✲		✲		✲
RGB (External Control)	✲	✲	✲	✲	✲	✲	✲	✲	✲	✲	✲	✲	✲	✲	✲	✲
DMX512			✲				✲				✲				✲	
Centre Hole	Φ48mm															
Weight Reference	2.5KG															

Model / Control Method	HX180ZK - 12*2W				HX180ZK - 6*3W (RGB)				HX180ZK - 12*3W (RGB)			
	DC12V	AC12V	DC24V	AC24V	DC12V	AC12V	DC24V	AC24V	DC12V	AC12V	DC24V	AC24V
Monochrome	✲	✲	✲	✲								
RGB (Internal Control)		✲		✲		✲		✲				✲
RGB (External Control)	✲	✲	✲	✲			✲	✲			✲	✲
DMX512			✲				✲				✲	✲
Centre Hole	Φ48mm											
Weight Reference	2.5KG											

HX180ZMK

Equipment Exhibition

Product Size

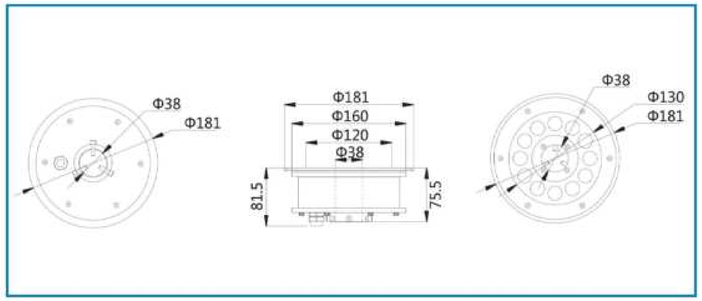

Technical Parameter

Model / Control Method	HX180ZMK - 12*1W				HX180ZMK - 15*1W				HX180ZMK - 18*1W			
	DC12V	AC12V	DC24V	AC24V	DC12V	AC12V	DC24V	AC24V	DC12V	AC12V	DC24V	AC24V
Monochrome	✲	✲	✲	✲	✲	✲	✲	✲	✲	✲	✲	✲
RGB (Internal Control)		✲		✲		✲		✲		✲		✲
RGB (External Control)	✲	✲	✲	✲	✲	✲	✲	✲		✲	✲	✲
DMX512			✲				✲				✲	✲
Centre Hole Recommended Cut Out Size	Φ60mm Φ165mm											
Weight Reference	2.7KG											

HX180ZMKH

Equipment Exhibition

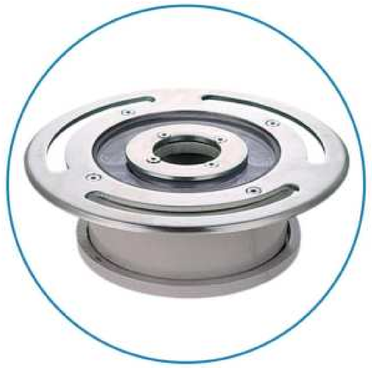

Product Size

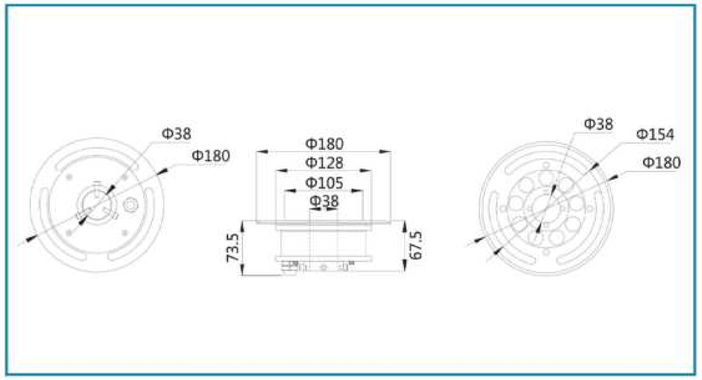

Technical Parameter

Model / Control Method	HX180ZMKH - 6*1W				HX180ZMKH - 9*1W			
	DC12V	AC12V	DC24V	AC24V	DC12V	AC12V	DC24V	AC24V
Monochrome	✲	✲	✲	✲	✲	✲	✲	✲
RGB (Internal Control)		✲		✲		✲		✲
RGB (External Control)	✲	✲	✲	✲	✲	✲	✲	✲
DMX512			✲				✲	
Centre Hole Recommended Cut Out Size	Φ38mm Φ160mm							
Weight Reference	2.0KG							

HX200ZK

Equipment Exhibition

Product Size

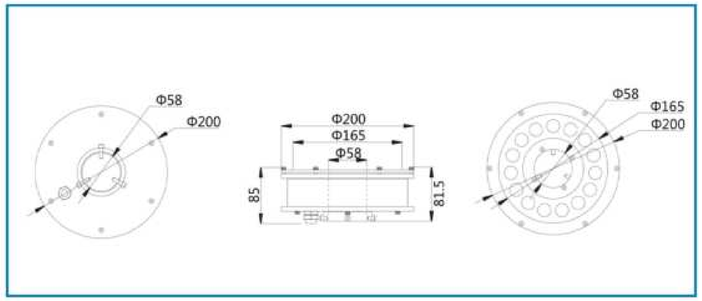

Technical Parameter

Model / Control Method	HX200ZK - 12*1W				HX200ZK - 15*1W				HX200ZK - 18*1W			
	DC12V	AC12V	DC24V	AC24V	DC12V	AC12V	DC24V	AC24V	DC12V	AC12V	DC24V	AC24V
Monochrome	✲	✲	✲	✲	✲	✲	✲	✲	✲	✲	✲	✲
RGB (Internal Control)		✲		✲		✲		✲		✲		✲
RGB (External Control)	✲	✲	✲	✲	✲	✲	✲	✲		✲	✲	✲
DMX512			✲				✲				✲	✲
Centre Hole	Φ60mm											
Weight Reference	2.7KG											

HX200ZMK

Equipment Exhibition

Product Size

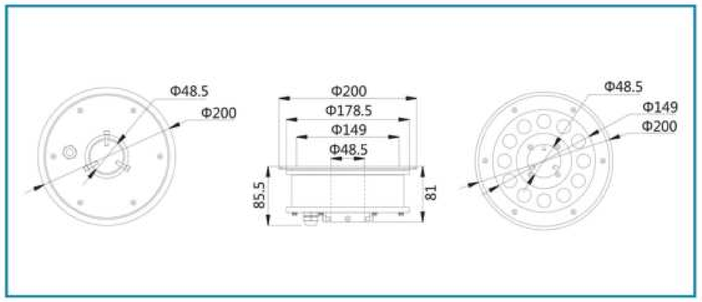

Technical Parameter

Model / Control Method	HX200ZMK - 9*1W				HX200ZMK - 12*1W				HX200ZMK - 15*1W				HX200ZMK - 9*2W			
	DC12V	AC12V	DC24V	AC24V	DC12V	AC12V	DC24V	AC24V	DC12V	AC12V	DC24V	AC24V	DC12V	AC12V	DC24V	AC24V
Monochrome	✲	✲	✲	✲	✲	✲	✲	✲	✲	✲	✲	✲	✲	✲	✲	✲
RGB (Internal Control)		✲		✲		✲		✲		✲		✲		✲		✲
RGB (External Control)	✲	✲	✲	✲	✲	✲	✲	✲	✲	✲	✲	✲	✲	✲	✲	✲
DMX512			✲				✲				✲				✲	
Centre Hole	Φ48mm Φ185mm															
Weight Reference	2.8KG															

Model / Control Method	HX200ZMK - 12*2W				HX200ZMK - 6*3W (RGB)				HX200ZMK - 12*3W			
	DC12V	AC12V	DC24V	AC24V	DC12V	AC12V	DC24V	AC24V	DC12V	AC12V	DC24V	AC24V
Monochrome	✲	✲	✲	✲								
RGB (Internal Control)		✲		✲		✲		✲		✲		✲
RGB (External Control)	✲	✲	✲	✲	✲	✲	✲	✲	✲	✲	✲	✲
DMX512			✲				✲	✲			✲	✲
Centre Hole	Φ48mm Φ185mm											
Weight Reference	2.8KG											

HX210ZMKH

Equipment Exhibition

Product Size

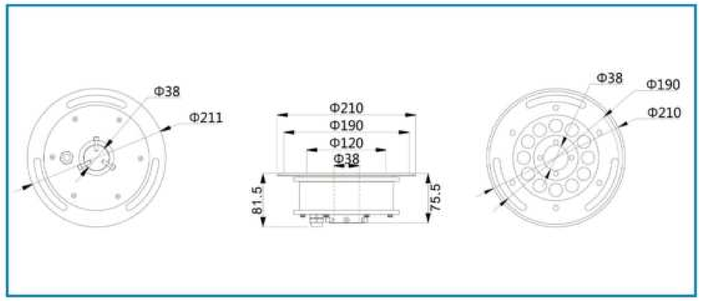

Technical Parameter

Model / Control Method	HX210ZMKH - 6*1W				HX210ZMKH - 9*1W				HX210ZMKH - 12*1W			
	DC12V	AC12V	DC24V	AC24V	DC12V	AC12V	DC24V	AC24V	DC12V	AC12V	DC24V	AC24V
Monochrome	✲	✲	✲	✲	✲	✲	✲	✲	✲	✲	✲	✲
RGB (Internal Control)		✲		✲		✲		✲		✲		✲
RGB (External Control)	✲	✲	✲	✲	✲	✲	✲	✲		✲	✲	✲
DMX512			✲				✲				✲	
Centre Hole Recommended Cut Out Size	Φ38mm Φ190mm											
Weight Reference	2.3KG											

HX220ZMK

Equipment Exhibition

Product Size

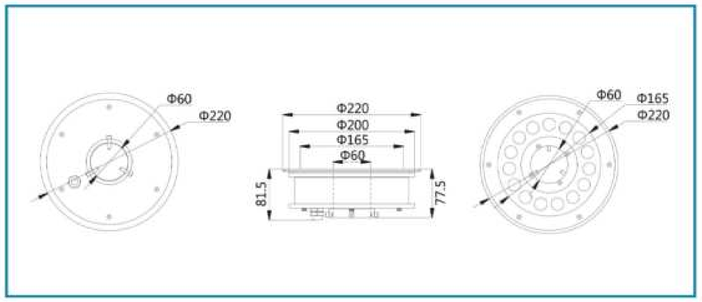

Technical Parameter

Model / Control Method	HX220ZMK - 12*1W				HX220ZMK - 15*1W				HX220ZMK - 18*1W			
	DC12V	AC12V	DC24V	AC24V	DC12V	AC12V	DC24V	AC24V	DC12V	AC12V	DC24V	AC24V
Monochrome	✲	✲	✲	✲	✲	✲	✲	✲	✲	✲	✲	✲
RGB (Internal Control)		✲		✲		✲		✲		✲		✲
RGB (External Control)	✲	✲	✲	✲	✲	✲	✲	✲	✲	✲	✲	✲
DMX512			✲				✲				✲	
Centre Hole Recommended Cut Out Size	Φ60mm Φ205mm											
Weight Reference	2.6KG											

HX240ZMKH

Equipment Exhibition

Product Size

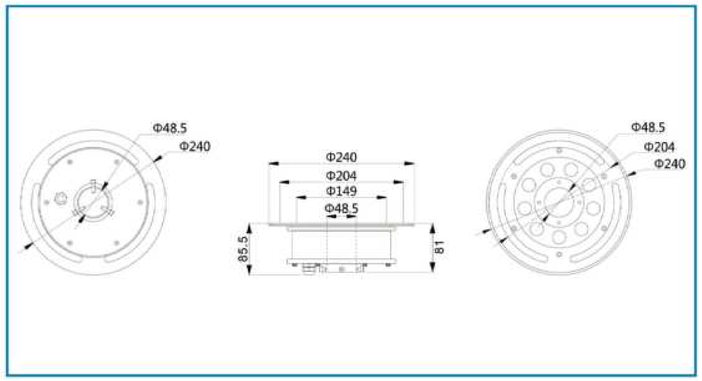

Technical Parameter

Model / Control Method	HX240ZMKH - 9*1W				HX240ZMKH - 12*1W				HX240ZMKH - 15*1W				HX240ZMKH - 9*2W			
	DC12V	AC12V	DC24V	AC24V	DC12V	AC12V	DC24V	AC24V	DC12V	AC12V	DC24V	AC24V	DC12V	AC12V	DC24V	AC24V
Monochrome	✲	✲	✲	✲	✲	✲	✲	✲	✲	✲	✲	✲	✲	✲	✲	✲
RGB (Internal Control)		✲		✲		✲		✲		✲		✲		✲		✲
RGB (External Control)	✲	✲	✲	✲	✲	✲	✲	✲	✲	✲	✲	✲	✲	✲	✲	✲
DMX512			✲				✲				✲				✲	
Centre Hole Recommended Cut Out Size	48mm Φ210mm															
Weight Reference	2.8KG															

Model / Control Method	HX240ZMKH - 12*3W (RGB)			
	DC12V	AC12V	DC24V	AC24V
Monochrome				
RGB (Internal Control)		✲		✲
RGB (External Control)	✲	✲	✲	✲
DMX512			✲	✲
Centre Hole Recommended Cut Out Size	48mm Φ210mm			
Weight Reference	2.8KG			

HX42GM

Equipment Exhibition

Product Size

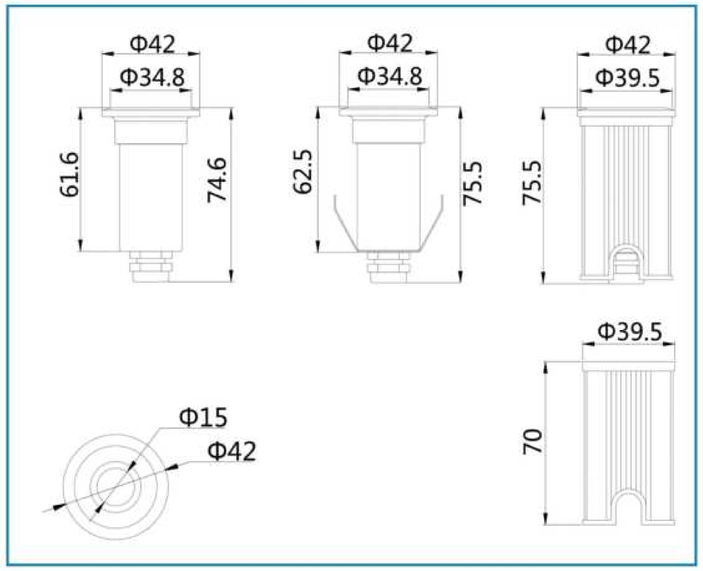

Technical Parameter

Model / Control Method	HX42GM - 1W			
	DC12V	AC12V	DC24V	AC24V
Monochrome	✲	✲	✲	✲
RGB (Internal Control)				
RGB (External Control)				
DMX512				
Cut Out Height	38mm 75mm			
Weight Reference	0.3KG			

HX52GM

Equipment Exhibition

Product Size

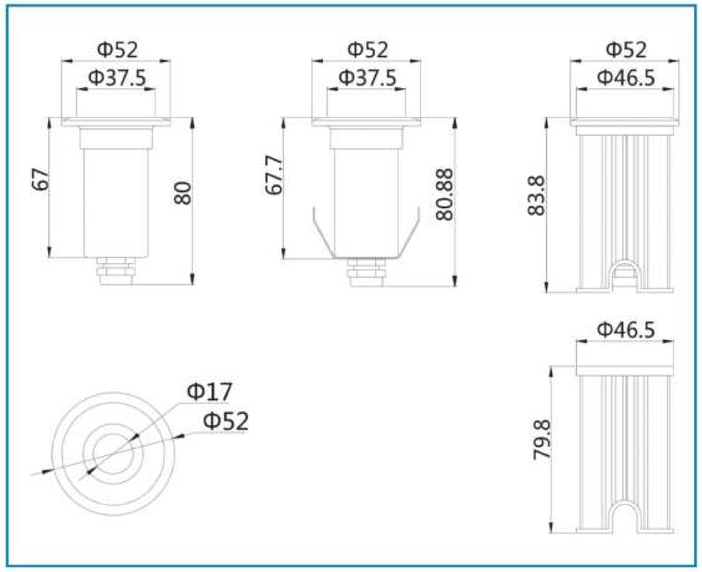

Technical Parameter

Model / Control Method	HX52GM - 1*1W				HX52GM - 1*3W				HX52GM - 1*3W (RGB)				HX52GM - 1*4W (RGBW)			
	DC12V	AC12V	DC24V	AC24V	DC12V	AC12V	DC24V	AC24V	DC12V	AC12V	DC24V	AC24V	DC12V	AC12V	DC24V	AC24V
Monochrome	*	*	*	*	*	*	*	*								
RGB (Internal Control)												*				
RGB (External Control)									*	*	*	*			*	*
DMX512											*				*	
Cut Out Height	38mm 85mm															
Weight Reference	0.5KG															

HX75GM

Equipment Exhibition

Product Size

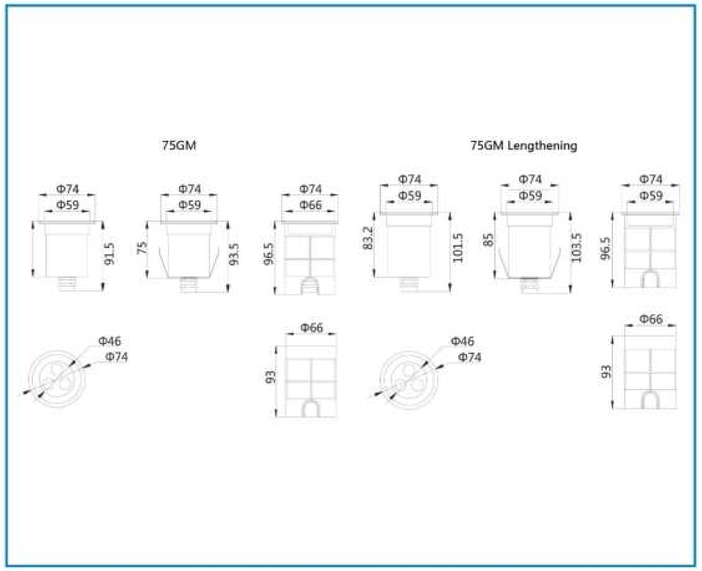

Technical Parameter

Model / Control Method	HX75GM - 3*1W				HX75GM - 3*3W				HX75GM - 1*9W (RGB)				HX75GM - 1*10W			
	DC12V	AC12V	DC24V	AC24V	DC12V	AC12V	DC24V	AC24V	DC12V	AC12V	DC24V	AC24V	DC12V	AC12V	DC24V	AC24V
Monochrome	*	*	*	*	*	*	*	*								
RGB (Internal Control)						*		*		*		*				
RGB (External Control)					*	*	*	*	*	*	*	*			*	*
DMX512							*	*			*	*			*	*
Cut Out Height	38mm 85mm															
Weight Reference	0.5KG															

HX100GM

Equipment Exhibition



Product Size

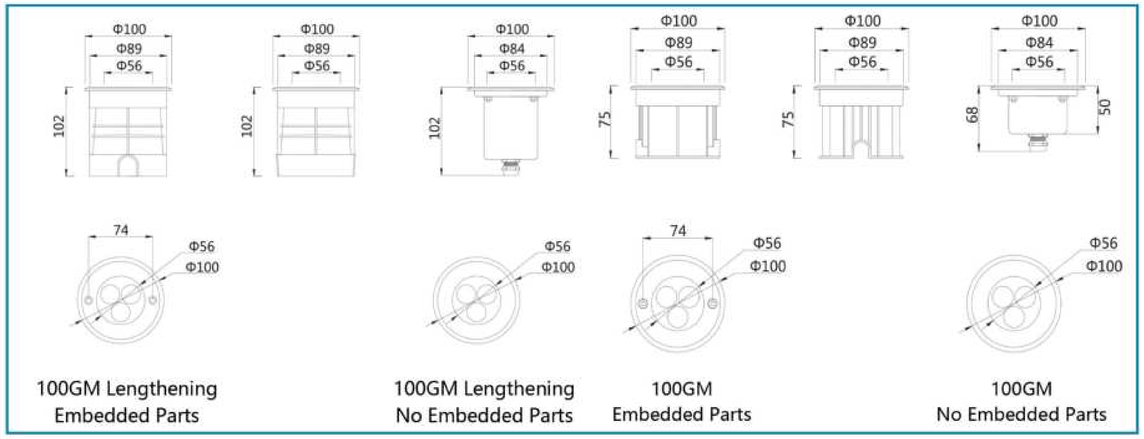

100GM Lengthening Embedded Parts

100GM Lengthening No Embedded Parts

100GM Embedded Parts

100GM No Embedded Parts

Technical Parameter

Model / Control Method	HX100GM - 3*1W				HX100GM - 3*2W				HX100GM - 3*3W (RGB)				HX100GM - 3*4W (RGBW)			
	DC12V	AC12V	DC24V	AC24V	DC12V	AC12V	DC24V	AC24V	DC12V	AC12V	DC24V	AC24V	DC12V	AC12V	DC24V	AC24V
Monochrome	✲	✲	✲	✲			✲	✲								
RGB (Internal Control)												✲				
RGB (External Control)											✲	✲			✲	✲
DMX512											✲	✲			✲	✲
Cut Out Height	90mm 75mm															
Weight Reference	0.8KG															

HX130GM

Equipment Exhibition



Product Size

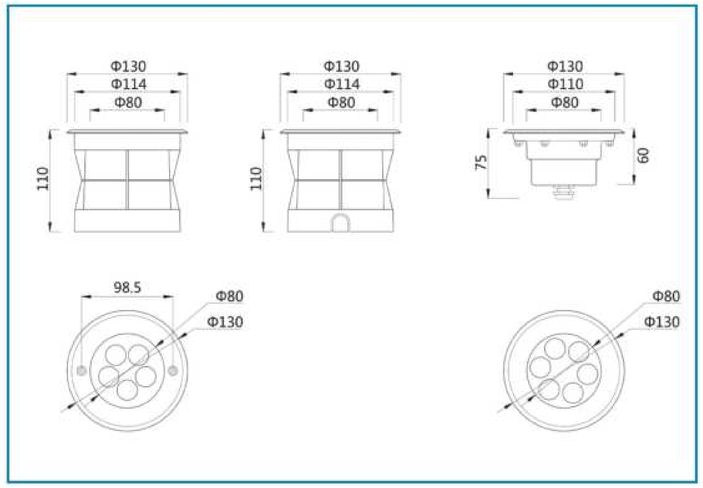

Technical Parameter

Model / Control Method	HX130GM - 3W				HX130GM - 6W				HX130GM - 3*3W (RGB)				HX130GM - 3*6W (RGB)			
	DC12V	AC12V	DC24V	AC24V	DC12V	AC12V	DC24V	AC24V	DC12V	AC12V	DC24V	AC24V	DC12V	AC12V	DC24V	AC24V
Monochrome	✲	✲	✲	✲	✲	✲	✲	✲								
RGB (Internal Control)		✲		✲		✲		✲		✲		✲				
RGB (External Control)	✲	✲	✲	✲	✲	✲	✲	✲	✲	✲	✲	✲			✲	
DMX512			✲				✲				✲				✲	
Cut Out Height	115mm 110mm															
Weight Reference	1.0KG															

HX150GM

Equipment Exhibition

Product Size

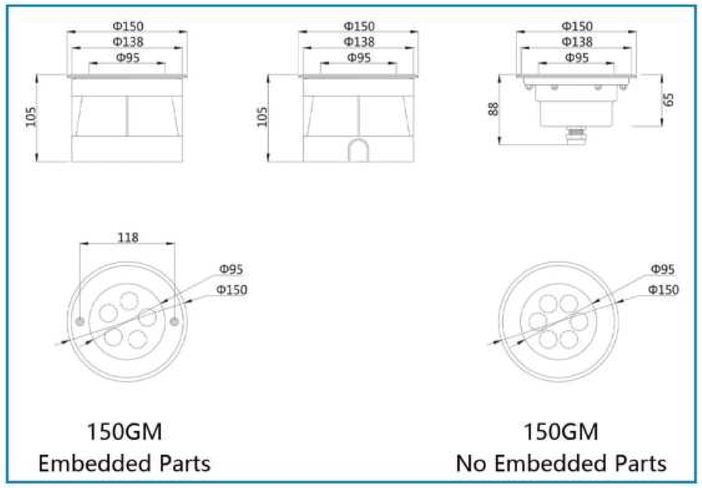

150GM
Embedded Parts

150GM
No Embedded Parts

Technical Parameter

Model / Control Method	HX150GM - 6*1W				HX150GM - 6*2W				HX150GM - 3*3W (RGB)			
	DC12V	AC12V	DC24V	AC24V	DC12V	AC12V	DC24V	AC24V	DC12V	AC12V	DC24V	AC24V
Monochrome	✲	✲	✲	✲	✲	✲	✲	✲				
RGB (Internal Control)		✲		✲		✲		✲		✲		✲
RGB (External Control)	✲	✲	✲	✲	✲	✲	✲	✲	✲	✲	✲	✲
DMX512			✲				✲				✲	
Cut Out Height	140mm 105mm											
Weight Reference	1.0KG											

HX165GM

Equipment Exhibition

Product Size

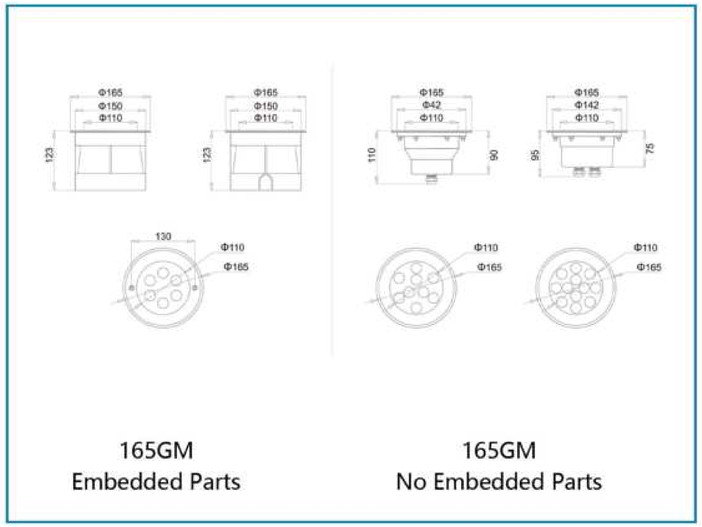

165GM
Embedded Parts

165GM
No Embedded Parts

Technical Parameter

Model / Control Method	HX165GM - 9*1W				HX210ZMKH - 9*1W				HX165GM - 12*1W			
	DC12V	AC12V	DC24V	AC24V	DC12V	AC12V	DC24V	AC24V	DC12V	AC12V	DC24V	AC24V
Monochrome	✲	✲	✲	✲	✲	✲	✲	✲				
RGB (Internal Control)		✲		✲		✲		✲				
RGB (External Control)	✲	✲	✲	✲	✲	✲	✲	✲				
DMX512	✲		✲				✲				✲	
Cut Out Height	150mm 125mm											
Weight Reference	1.5KG											

Model / Control Method	HX165GM - 6*3W (RGB)				HX165GM - 3*4W (RGBW)				HX165GM - 5*4W (RGBW)			
	DC12V	AC12V	DC24V	AC24V	DC12V	AC12V	DC24V	AC24V	DC12V	AC12V	DC24V	AC24V
Monochrome												
RGB (Internal Control)		✲		✲								
RGB (External Control)			✲	✲	✲	✲	✲	✲			✲	✲
DMX512			✲		✲		✲				✲	
Cut Out Height	150mm 125mm											
Weight Reference	1.5KG											

RECESSED UNDERGROUND LIGHTS

HX180GM

Equipment Exhibition

Product Size

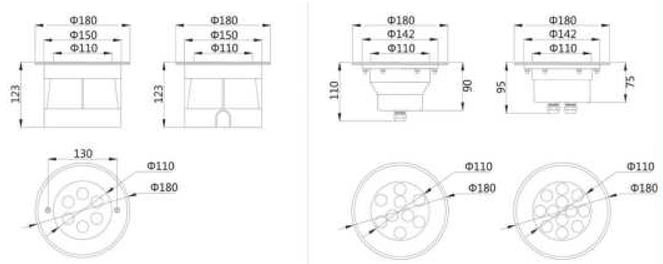

180GM
Embedded Parts

180GM
No Embedded Parts

Technical Parameter

Model / Control Method	HX180GM - 9*1W				HX180GM - 12*1W				HX180GM - 4*3W (RGB)			
	DC12V	AC12V	DC24V	AC24V	DC12V	AC12V	DC24V	AC24V	DC12V	AC12V	DC24V	AC24V
Monochrome	✲	✲	✲	✲	✲	✲	✲	✲				
RGB (Internal Control)		✲		✲		✲		✲				
RGB (External Control)	✲	✲	✲	✲	✲	✲	✲	✲				
DMX512	✲		✲				✲				✲	
Cut Out Height	150mm 125mm											
Weight Reference	2.1KG											

Model / Control Method	HX180GM - 6*3W (RGB)				HX180GM - 3*4W (RGBW)				HX180GM - 5*4W (RGBW)			
	DC12V	AC12V	DC24V	AC24V	DC12V	AC12V	DC24V	AC24V	DC12V	AC12V	DC24V	AC24V
Monochrome												
RGB (Internal Control)		✲		✲								
RGB (External Control)			✲	✲	✲	✲	✲	✲			✲	✲
DMX512			✲		✲		✲				✲	
Cut Out Height	150mm 125mm											
Weight Reference	2.1KG											

RECESSED UNDERGROUND LIGHTS

HX200GM

Equipment Exhibition

Product Size

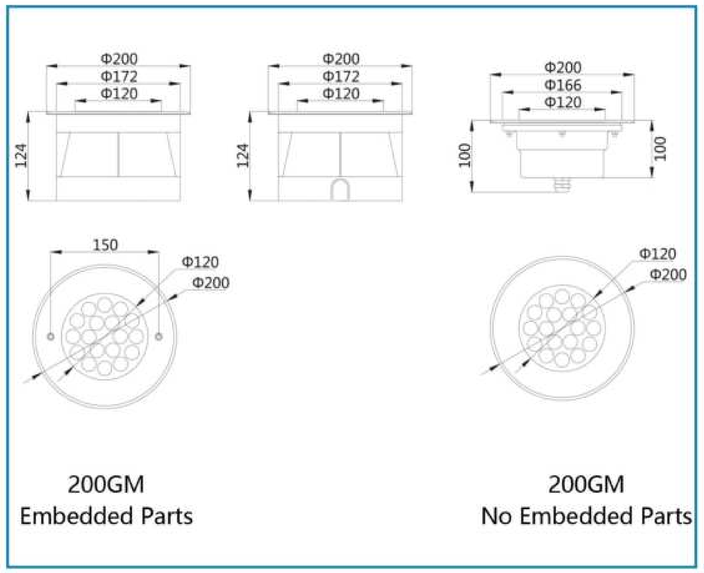

200GM
Embedded Parts

200GM
No Embedded Parts

Technical Parameter

Model / Control Method	HX200GM - 12*1W				HX200GM - 18*1W				HX200GM - 12*2W				HX200GM - 6*3W (RGB)			
	DC12V	AC12V	DC24V	AC24V	DC12V	AC12V	DC24V	AC24V	DC12V	AC12V	DC24V	AC24V	DC12V	AC12V	DC24V	AC24V
Monochrome	✲	✲	✲	✲	✲	✲	✲	✲								
RGB (Internal Control)		✲		✲		✲		✲				✲				✲
RGB (External Control)	✲	✲	✲	✲	✲	✲	✲	✲			✲	✲			✲	✲
DMX512			✲				✲				✲				✲	
Cut Out Height	175mm 125mm															
Weight Reference	2.1KG															

HX220GM

Equipment Exhibition

Product Size

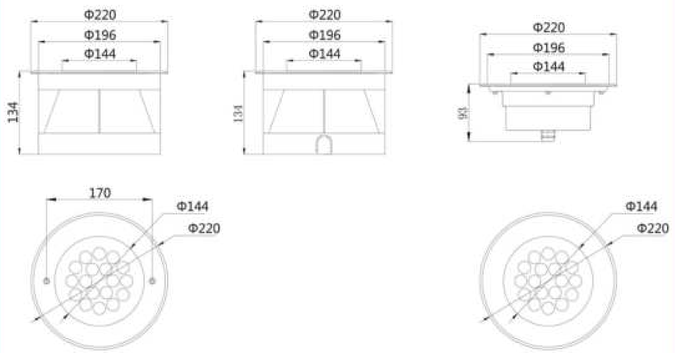

220GM
Embedded Parts

220GM
No Embedded Parts

Technical Parameter

Model / Control Method	HX220GM - 18*1W				HX220GM - 24*1W				HX220GM - 18*2W				HX220GM - 6*4W (RGBW)			
	DC12V	AC12V	DC24V	AC24V	DC12V	AC12V	DC24V	AC24V	DC12V	AC12V	DC24V	AC24V	DC12V	AC12V	DC24V	AC24V
Monochrome	*	*	*	*			*	*								
RGB (Internal Control)		*		*				*				*				
RGB (External Control)	*	*	*	*			*	*			*	*			*	*
DMX512			*				*	*			*	*			*	
Cut Out Height	200mm 134mm															
Weight Reference	2.5KG															

HX245GM

Equipment Exhibition

Product Size

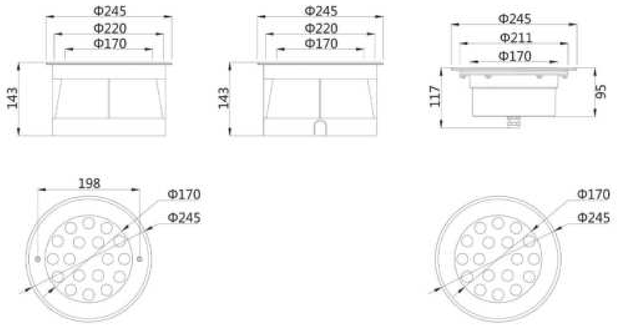

245GM
Embedded Parts

245GM
No Embedded Parts

Technical Parameter

Model / Control Method	HX245GM - 18*1W				HX245GM - 30*1W				HX245GM - 18*2W				HX245GM - 24*2W			
	DC12V	AC12V	DC24V	AC24V	DC12V	AC12V	DC24V	AC24V	DC12V	AC12V	DC24V	AC24V	DC12V	AC12V	DC24V	AC24V
Monochrome	*	*	*	*			*	*			*	*				
RGB (Internal Control)		*		*				*				*				*
RGB (External Control)	*	*	*	*			*	*			*	*			*	*
DMX512			*				*				*	*			*	
Cut Out Height	220mm 145mm															
Weight Reference	2.5KG															

HX230*115*103

Equipment Exhibition

Product Size

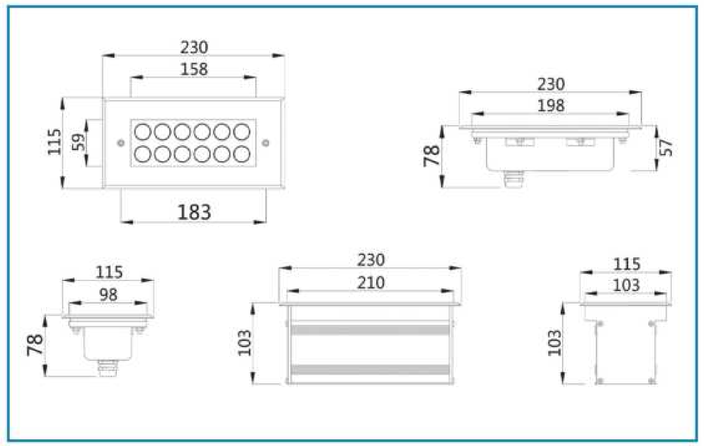

Technical Parameter

Model / Control Method	HX230*115*103 - 4*1W			
	DC12V	AC12V	DC24V	AC24V
Monochrome	✻	✻	✻	✻
RGB (Internal Control)		✻		✻
RGB (External Control)	✻	✻	✻	✻
DMX512			✻	
Installation Method	Embedded System			
Weight Reference	2.4KG			

WALL WASHER LIGHTS

HX230*115*123

Equipment Exhibition

Product Size

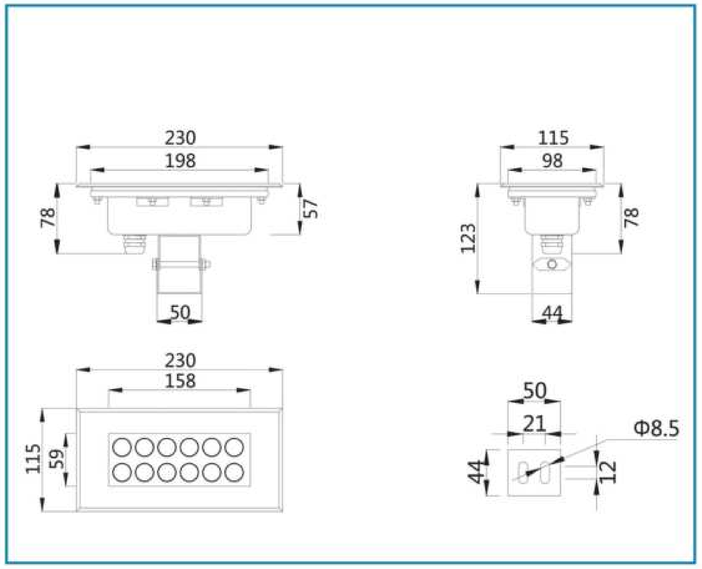

Technical Parameter

Model / Control Method	HX230*115*123 - 6*1W				HX230*115*123 - 6*2W			
	DC12V	AC12V	DC24V	AC24V	DC12V	AC12V	DC24V	AC24V
Monochrome	✻	✻	✻	✻	✻	✻	✻	✻
RGB (Internal Control)		✻		✻		✻		✻
RGB (External Control)	✻	✻	✻	✻	✻	✻	✻	✻
DMX512			✻				✻	
Installation Method	Bracket							
Weight Reference	1.8KG							

HX430*115*103

Equipment Exhibition

Product Size

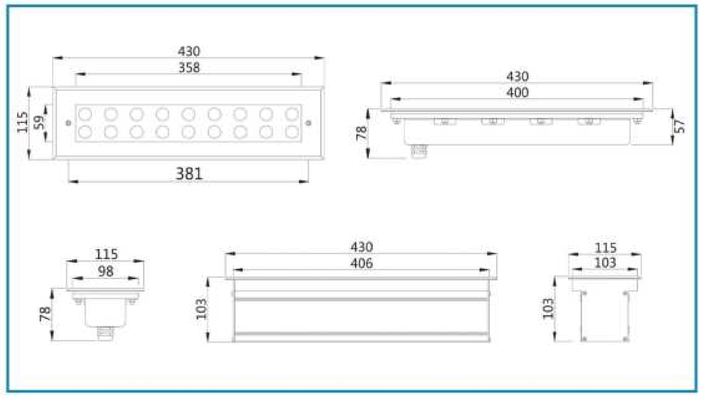

Technical Parameter

Model / Control Method	HX430*115*103 - 9*1W				HX430*115*103 - 18*1W			
	DC12V	AC12V	DC24V	AC24V	DC12V	AC12V	DC24V	AC24V
Monochrome	✲	✲	✲	✲	✲	✲	✲	✲
RGB (Internal Control)		✲		✲		✲		✲
RGB (External Control)	✲	✲	✲	✲	✲	✲	✲	✲
DMX512			✲				✲	
Installation Method	Embedded System							
Weight Reference	4.3KG							

WALL WASHER LIGHTS

HX430*115*123

Equipment Exhibition

Product Size

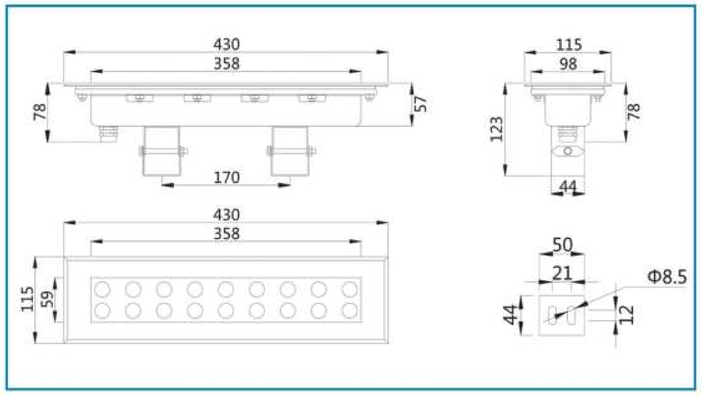

Technical Parameter

Model / Control Method	HX430*115*123 - 9*1W				HX430*115*123 - 18*1W				HX245GM - 18*2W				HX245GM - 24*2W			
	DC12V	AC12V	DC24V	AC24V	DC12V	AC12V	DC24V	AC24V	DC12V	AC12V	DC24V	AC24V	DC12V	AC12V	DC24V	AC24V
Monochrome	✲	✲	✲	✲	✲	✲	✲	✲								
RGB (Internal Control)		✲		✲		✲		✲				✲				
RGB (External Control)	✲	✲	✲	✲	✲	✲	✲	✲			✲	✲			✲	✲
DMX512			✲				✲				✲	✲			✲	
Installation Method	Bracket															
Weight Reference	3.3KG															

HX630*115*103

Equipment Exhibition

Product Size

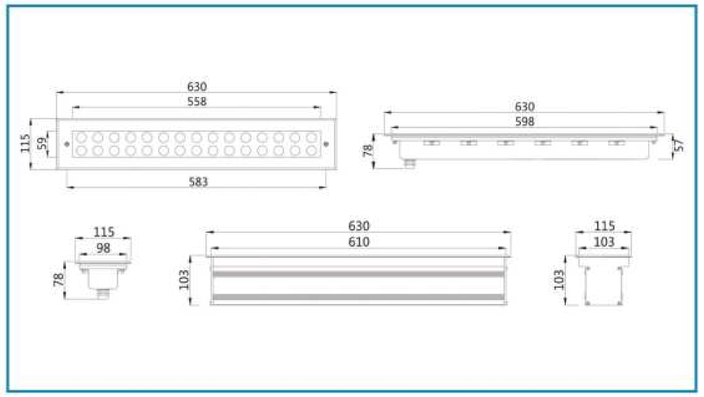

Technical Parameter

Model / Control Method	HX630*115*103 - 18*1W				HX630*115*103 - 24*1W			
	DC12V	AC12V	DC24V	AC24V	DC12V	AC12V	DC24V	AC24V
Monochrome	✲	✲	✲	✲			✲	✲
RGB (Internal Control)		✲		✲				✲
RGB (External Control)	✲	✲	✲	✲			✲	✲
DMX512			✲				✲	✲
Installation Method	Embedded System							
Weight Reference	6.3KG							

WALL WASHER LIGHTS

HX630*115*123

Equipment Exhibition

Product Size

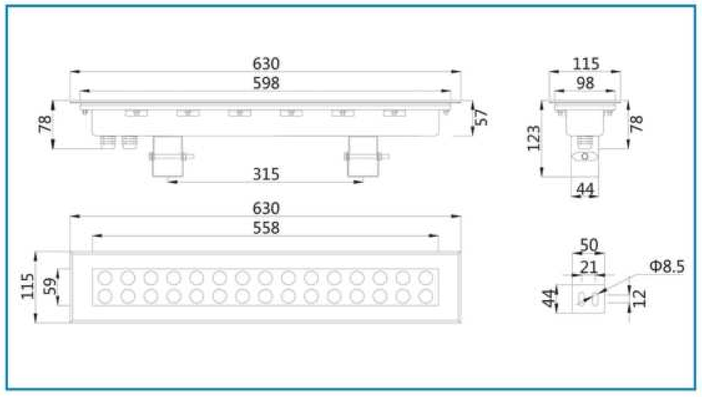

Technical Parameter

Model / Control Method	HX630*115*123 - 18*1W				HX630*115*123 - 24*1W				HX630*115*123 - 24*1W				HX630*115*123 - 12*3W (RGB)			
	DC12V	AC12V	DC24V	AC24V	DC12V	AC12V	DC24V	AC24V	DC12V	AC12V	DC24V	AC24V	DC12V	AC12V	DC24V	AC24V
Monochrome	✲	✲	✲	✲			✲	✲				✲				
RGB (Internal Control)		✲		✲				✲						✲		✲
RGB (External Control)	✲	✲	✲	✲			✲	✲			✲	✲	✲	✲	✲	✲
DMX512			✲				✲	✲			✲	✲			✲	✲
Installation Method	Bracket															
Weight Reference	5.0KG															

HX830*115*103

Equipment Exhibition

Product Size

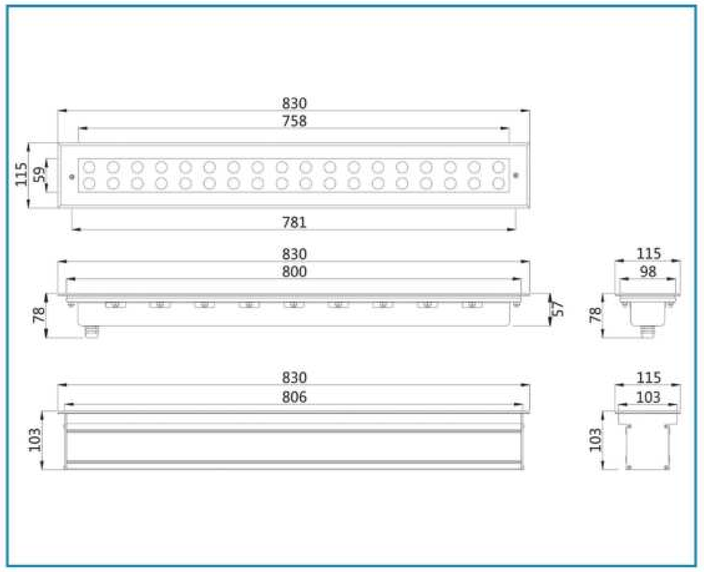

Technical Parameter

Model / Control Method	HX830*115*103 - 24*1W				HX830*115*103 - 36*1W				HX830*115*103 - 24*2W			
	DC12V	AC12V	DC24V	AC24V	DC12V	AC12V	DC24V	AC24V	DC12V	AC12V	DC24V	AC24V
Monochrome			✲	✲			✲	✲			✲	✲
RGB (Internal Control)				✲				✲				✲
RGB (External Control)			✲	✲			✲	✲			✲	✲
DMX512			✲	✲			✲	✲			✲	✲
Installation Method	Embedded System											
Weight Reference	8.2KG											

HX830*115*123

Equipment Exhibition

Product Size

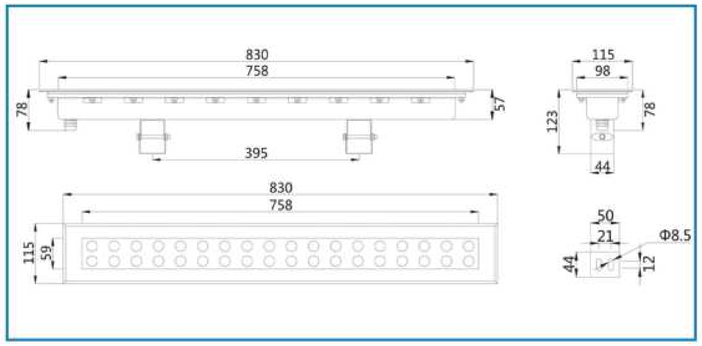

Technical Parameter

Model / Control Method	HX830*115*123 - 24*1W				HX830*115*123 - 36*1W				HX830*115*123 - 36*2W			
	DC12V	AC12V	DC24V	AC24V	DC12V	AC12V	DC24V	AC24V	DC12V	AC12V	DC24V	AC24V
Monochrome			✲	✲			✲	✲				
RGB (Internal Control)				✲				✲				
RGB (External Control)			✲	✲			✲	✲			✲	✲
DMX512			✲	✲			✲	✲			✲	✲
Installation Method	Bracket											
Weight Reference	6.5KG											

Model / Control Method	HX830*115*123 - 12*3W (RGB)				HX830*115*123 - 24*3W (RGB)				HX830*115*123 - 6*6W (RGBW)			
	DC12V	AC12V	DC24V	AC24V	DC12V	AC12V	DC24V	AC24V	DC12V	AC12V	DC24V	AC24V
Monochrome												
RGB (Internal Control)		✲		✲								
RGB (External Control)	✲	✲	✲	✲			✲	✲			✲	✲
DMX512			✲	✲			✲	✲			✲	
Installation Method	Bracket											
Weight Reference	6.5KG											

HX987*72*114

Equipment Exhibition

Product Size

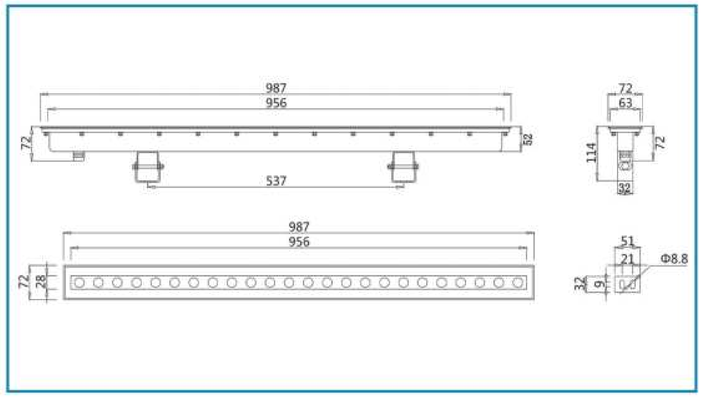

Technical Parameter

Model / Control Method	HX987*72*114 - 12*1W				HX987*72*114 - 18*1W			
	DC12V	AC12V	DC24V	AC24V	DC12V	AC12V	DC24V	AC24V
Monochrome	✻	✻	✻	✻	✻	✻	✻	✻
RGB (Internal Control)		✻		✻		✻		✻
RGB (External Control)	✻	✻	✻	✻	✻	✻	✻	✻
DMX512			✻				✻	
Installation Method	Embedded System							
Weight Reference	5.8KG							

WALL WASHER LIGHTS

HX1050*115*103

Equipment Exhibition

Product Size

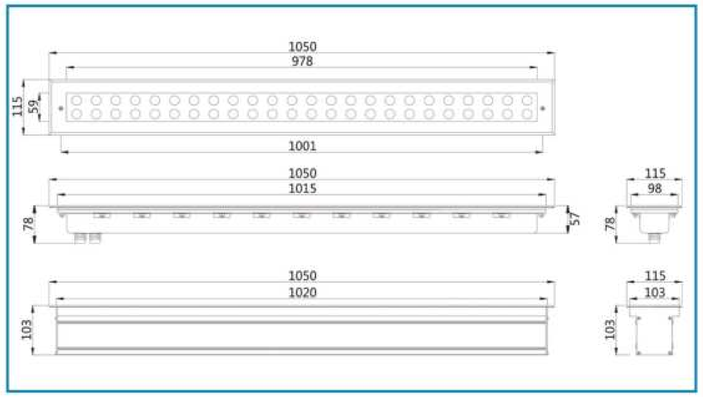

Technical Parameter

Model / Control Method	HX1050*115*103 - 36*1W				HX1050*115*103 - 48*1W			
	DC12V	AC12V	DC24V	AC24V	DC12V	AC12V	DC24V	AC24V
Monochrome			✻	✻			✻	✻
RGB (Internal Control)				✻				✻
RGB (External Control)			✻	✻			✻	✻
DMX512			✻	✻			✻	✻
Installation Method	Embedded System							
Weight Reference	9.7KG							

HX1050*115*123

Equipment Exhibition

Product Size

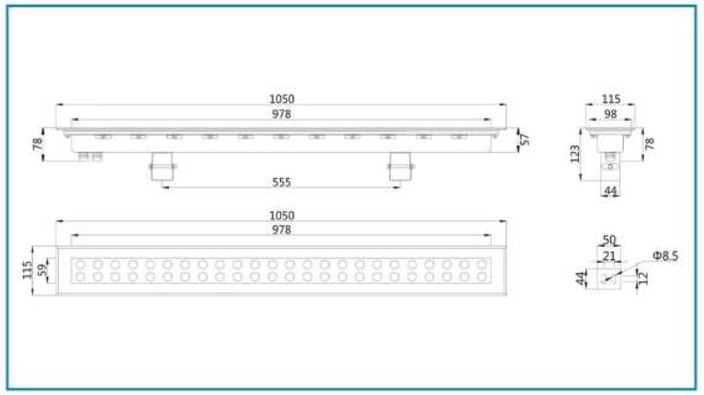

Technical Parameter

Model / Control Method	HX1050*115*123 - 36*1W				HX1050*115*123 - 24*2W				HX1050*115*123 - 48*1W				HX1050*115*123 - 48*2W			
	DC12V	AC12V	DC24V	AC24V	DC12V	AC12V	DC24V	AC24V	DC12V	AC12V	DC24V	AC24V	DC12V	AC12V	DC24V	AC24V
Monochrome			✻	✻				✻			✻	✻				
RGB (Internal Control)				✻								✻				✻
RGB (External Control)			✻	✻			✻	✻			✻	✻			✻	✻
DMX512			✻	✻			✻	✻			✻	✻			✻	✻
Installation Method	Bracket															
Weight Reference	7.7KG															

WALL WASHER LIGHTS

HX500*145*110

Equipment Exhibition

Product Size

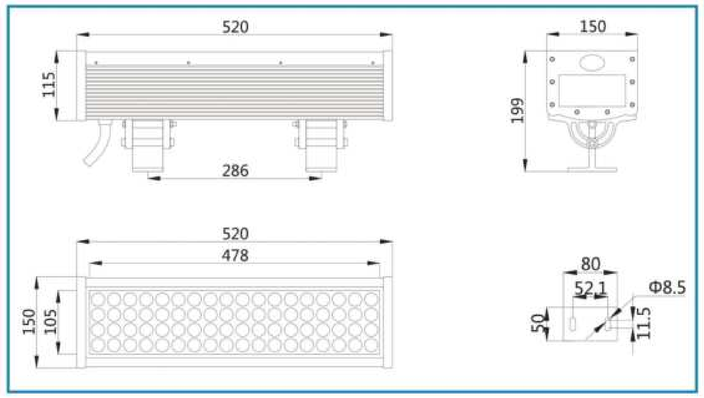

Technical Parameter

Model / Control Method	HX500*145*110 - 72*1W				HX500*145*110 - 36*2W			
	DC12V	AC12V	DC24V	AC24V	DC12V	AC12V	DC24V	AC24V
Monochrome								
RGB (Internal Control)								
RGB (External Control)			✻	✻			✻	✻
DMX512			✻	✻			✻	✻
Installation Method	Bracket							
Weight Reference	2.2KG							

HX500*77*135

Equipment Exhibition

Product Size

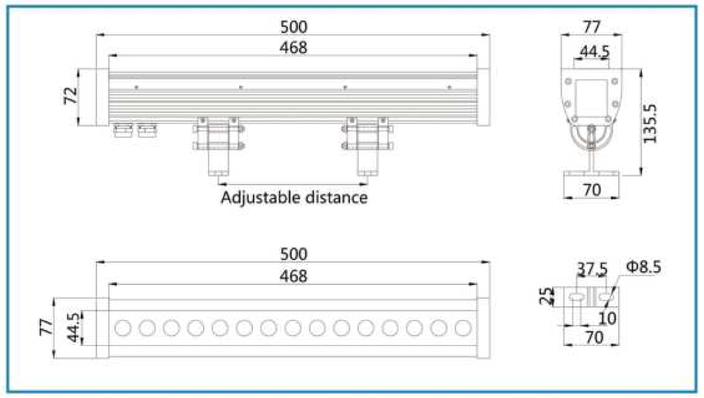

Technical Parameter

Model / Control Method	HX500*77*135 - 12*1W				HX500*77*135 - 12*3W			
	DC12V	AC12V	DC24V	AC24V	DC12V	AC12V	DC24V	AC24V
Monochrome	✻	✻		✻				
RGB (Internal Control)		✻		✻				
RGB (External Control)	✻	✻	✻	✻			✻	✻
DMX512			✻	✻			✻	✻
Installation Method	Bracket							
Weight Reference	2.2KG							

WALL WASHER LIGHTS

HX500*90*134

Equipment Exhibition

Product Size

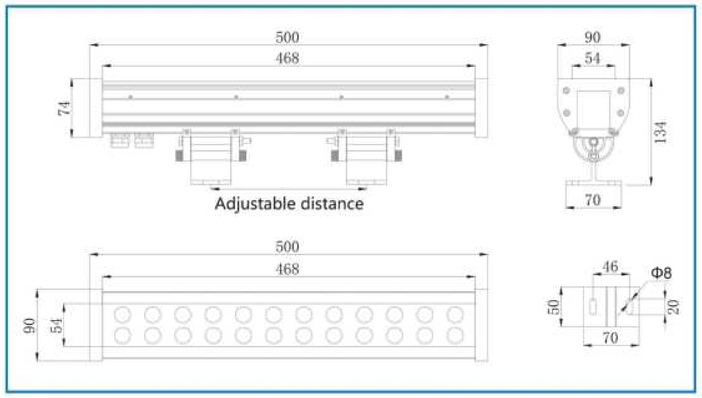

Technical Parameter

Model / Control Method	HX500*90*134 - 24*1W				HX500*90*134 - 36*1W			
	DC12V	AC12V	DC24V	AC24V	DC12V	AC12V	DC24V	AC24V
Monochrome			✻	✻			✻	✻
RGB (Internal Control)				✻				✻
RGB (External Control)			✻	✻			✻	✻
DMX512			✻	✻			✻	✻
Installation Method	Bracket							
Weight Reference	2.5KG							

HX1000*77*135

Equipment Exhibition

Product Size

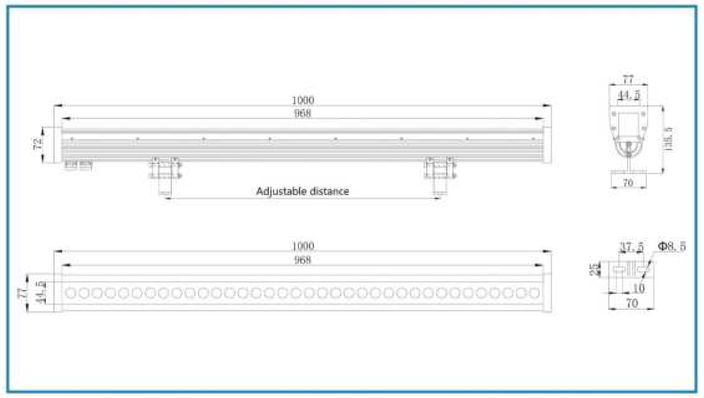

Technical Parameter

Model / Control Method	HX1000*77*135 - 24*1W				HX10000*77*135 - 36*1W			
	DC12V	AC12V	DC24V	AC24V	DC12V	AC12V	DC24V	AC24V
Monochrome			✻	✻			✻	✻
RGB (Internal Control)				✻				✻
RGB (External Control)			✻	✻			✻	✻
DMX512			✻	✻			✻	✻
Installation Method	Bracket							
Weight Reference	5.0KG							

WALL WASHER LIGHTS

HX1000*90*134

Equipment Exhibition

Product Size

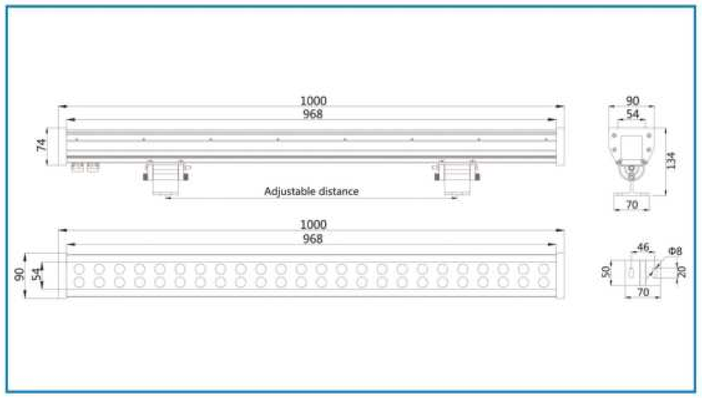

Technical Parameter

Model / Control Method	HX1000*90*134 - 48*1W				HX1000*90*134 - 72*1W			
	DC12V	AC12V	DC24V	AC24V	DC12V	AC12V	DC24V	AC24V
Monochrome			✻	✻			✻	✻
RGB (Internal Control)				✻				✻
RGB (External Control)			✻	✻			✻	✻
DMX512			✻	✻			✻	✻
Installation Method	Bracket							
Weight Reference	5.5KG							

Low Voltage Fountain Pump

THE MEANING OF THE MODEL:

4 DP 5 - 2 - 8 / 900

- 900: Distribution Power Of The Pump Set: 900W
- 8: Lift Of Pump: 8m
- 2: Impeller Stages: 2
- 5: Flow: 5m³/h
- DP: Low Pressure Stainless Steel Pump
- 4: The Diameter Of The Pump

Model Selection Table

Model	Distribution Power Of The Pump Set	Motor Power	Voltage Of Switching Power Supply	The Working Voltage Of The Motor	Flow/Lift	Rotating Speed
	W	W	V	V	m³h/m	r/min
DP6-1-6/400 (Horizontal)	400	200	24 (21-36)	12/24	6/6	2850
4DP5-1-4/400	400	200	24 (21-36)	12/24	5/4	2850
4DP5-2-8/900	900	200	24 (21-36)	12/24	5/8	2850
4DP8-1-4.5/900	900	200	24 (21-36)	12/24	8/4.5	2850
4DP5-3-12/1200	1200	370	36 (30-48)	12/24	5/12	2850
4DP8-2-9/1200	1200	370	36 (30-48)	12/24	8/9	2850
4DP14-1-4/1200	1200	370	36 (30-48)	12/24	14/4	2850
4DP5-4-16/1400	1400	370	36 (30-48)	12/24	5/16	2850
4DP8-3-12/1600	1600	550	36 (30-48)	24/36	8/12	2850
4DP14-2-8/1600	1600	550	36 (30-48)	24/36	14/8	2850
4DP8-4-16/2500	2500	750	48 (42-60)	24/36	8/16	2850
6DP20-1-9/2500	2500	750	48 (42-60)	24/36	20/9	2850
4DP14-3-12/2500	2500	750	48 (42-60)	24/36	14/12	2850
6DP30-1-8/3500	3500	1100	48 (42-60)	36	30/8	2850

Fountain Pump (Regular version)

4SP 2T
4SP 3T
4SP 5T
4SP 8T
4SP 14T

6SP 17T
6SP 30T
6SP 46T
6SP 60T

8SP 77T
8SP 95T
10SP 125T
10SP 160T

Applications

Series-4SP (Stainlesss Steel Pump)

No.	Model	Motor Power		Current (Single Phase)	Current (Three-Phase)	Flow/Lift			Total Length	Outlet Diameter
		HP	KW	A	A					
1	4SP2-6A	0.5	0.37	3.2	-	1.5m³ /30m	2m³/24m	2.5m³/20m	281	Dn32 1 1/4"
2	4SP2-9A	0.5	0.37	3.2	-	1.5m³/45m	2m³/36m	2.5m³/30m	344	
3	4SP2-13A	0.75	0.55	4.2	1.6	1.5m³/64m	2m³/52m	2.5m³/44m	428	
4	4SP2-18A	1	0.75	5.7	2.5	1.5m³/89m	2m³/73m	2.5m³/66m	533	
5	4SP2-23A	1.5	1.1	7.8	3.2	1.5m³/114m	2m³/92m	2.5m³/77m	638	
6	4SP2-28A	2	1.5	10	4.2	1.5m³/139m	2m³/112m	2.5m³/94m	743	
7	4SP2-33A	2	1.5	10	4.2	1.5m₃ /163m	2m³/132m	2.5m³/111m	848	
8	4SP2-40A	3	2.2	14.2	5.8	1.5m₃ /198m	2m³/160m	2.5m³/135m	995	
9	4SP2-48A	3	2.2	14.2	5.8	1.5m₃ /237m	2m³/192m	2.5m³/161m	1163	
10	4SP2-55A	4	3	-	7.3	1.5m₃ /272m	2m³/220m	2.5m³/185m	1310	
11	4SP3-6A	0.5	0.37	3.2	-	2m₃ /30m	3m³/26m	4m³/19m	281	Dn32 1 1/4"
12	4SP3-9A	0.75	0.55	4.2	1.6	2m³/45m	3m³/38m	4m³/28m	344	
13	4SP3-12A	1	0.75	5.7	2.5	2m³/60m	3m³/ 51m	4m³/37m	407	
14	4SP3-15A	1.5	1.1	7.8	3.2	2m³/74m	3m³/ 64m	4m³/46m	470	
15	4SP3-18A	1.5	1.1	7.8	3.2	2m³/89m	3m³/ 77m	4m³/56m	533	
16	4SP3-22A	2	1.5	10	4.2	2m³/109m	3m³/ 94m	4m³/68m	617	
17	4SP3-25A	2	1.5	10	4.2	2m³/124m	3m³/ 107m	4m³/78m	680	
18	4SP3-32A	3	2.2	14.2	5.8	2m³/158m	3m³/ 137m	4m³/99m	827	
19	4SP3-39A	4	3	-	7.3	2m³/193m	3m³/ 167m	4m³/121m	974	
20	4SP3-44A	4	3	-	7.3	2m³/218m	3m³/ 188m	4m³/136m	1079	
21	4SP3-52A	5	4.0	-	9.3	2m³/ 257m	3m³/ 222m	4m³/161m	1247	
22	4SP5-04A	0.5	0.37	3.2	-	3m³/20m	5m³/ 16m	6m³/12m	239	Dn40 1 1/2"
23	4SP5-06A	0.75	0.55	4.2	1.6	3m³/30m	5m³/ 24m	6m³/18m	281	
24	4SP5-08A	1	0.75	5.7	2.3	3m³/40m	5m³/ 32m	6m³/24m	323	
25	4SP5-12A	1.5	1.1	7.8	3.2	3m³/60m	5m³/ 48m	6m³/36m	407	
26	4SP5-17A	2	1.5	10	4.2	3m³/85m	5m³/ 68m	6m³/51m	512	
27	4SP5-22A	3	2.2	14.2	5.8	3m³/110m	5m³/ 88m	6m³/66m	617	
28	4SP5-25A	3	2.2	14.2	5.8	3m³/125m	5m³/ 100m	6m³/75m	680	
29	4SP5-33A	4	3	-	7.3	3m³/165m	5m³/ 132m	6m³/99m	848	
30	4SP5-38A	5.5	4	-	9.3	3m³/190m	5m³/ 152m	6m³/114m	953	
31	4SP5-40A	5.5	4	-	9.3	3m³/200m	5m³/ 160m	6m³/120m	995	
32	4SP5-44A	5.5	4	-	9.3	3m³/220m	5m³/ 176m	6m³/132m	1079	
33	4SP5-52A	7.5	5.5	-	13	3m³/260m	5m³/208m	6m³/156m	1247	
34	4SP8-05A	1	0.75	5.7	2.5	6m³/25m	8m³/21m	10m³/15m	288	Dn50 2"
35	4SP8-07A	1.5	1.1	7.8	3.2	6m³/35m	8m³/30m	10m³/21m	343	
36	4SP8-10A	2	1.5	10	4.2	6m³/50m	8m³/43m	10m³/30m	425	
37	4SP8-12A	3	2.2	14.2	5.8	6m³/60m	8m³/51m	10m³/36m	480	
38	4SP8-14A	3	2.2	14.2	5.8	6m³/70m	8m³/60m	10m³/42m	535	
39	4SP8-18A	4	3	-	7.3	6m³/90m	8m³/77m	10m³/54m	645	
40	4SP8-21A	5.5	4	-	9.3	6m³/105m	8m³/90m	10m³/63m	728	
41	4SP8-24A	5.5	4	-	9.3	6m³/120m	8m³/103m	10m³/72m	810	
42	4SP8-30A	7.5	5.5	-	13	6m³/150m	8m³/129m	10m³/90m	975	
43	4SP8-35A	7.5	5.5	-	13	6m³/175m	8m³/150m	10m³/105m	1113	
44	4SP8-40A	10	7.5	-	18	6m³/200m	8m³/172m	10m³/120m	1250	
45	4SP8-44A	10	7.5	-	18	6m³/220m	8m³/189m	10m³/132m	1360	
46	4SP14-05A	2	1.5	10	4.2	8m³/29m	14m³/20m	16m³/16m	360	Dn50 2"
47	4SP14-07A	3	2.2	14.2	5.8	8m³/40m	14m³/28m	16m³/23m	444	
48	4SP14-10A	4	3	-	7.3	8m³/57m	14m³/40m	16m³/32m	570	
49	4SP14-13A	5.5	4	-	9.3	8m³/74m	14m³/52m	16m³/42m	696	
50	4SP14-15A	7.5	5.5	-	13	8m³/85m	14m³/60m	16m³/48m	780	
51	4SP14-18A	7.5	5.5	-	13	8m³/103m	14m³/72m	16m³/58m	906	
52	4SP14-21A	10	7.5	-	18	8m³/119m	14m³/84m	16m³/67m	1032	
53	4SP14-25A	10	7.5	-	18	8m³/143m	14m³/100m	16m³/80m	1200	

FOUNTAIN PUMP (REGULAR VERSION)

Series-6SP (Stainlesss Steel Pump)

No.	Model	Motor Power		Current (Three-Phase)	Flow/Lift			Total Length	Outlet Diameter
		KW	HP	A					
1	6SP17-01	0.55	0.75	1.6	10m³/10m	17m³/8m	25m³/4.3m	316	76mm 3"
2	6SP17-02	1.1	1.5	3.2	10m³/20m	17m³/16m	25m³/8.5m	361	
3	6SP17-03	2.2	3	5.8	10m³/30m	17m³/24m	25m³/13m	406	
4	6SP17-04	2.2	3	5.8	10m³/39m	17m³/33m	25m³/17m	451	
5	6SP17-05	3	4	8	10m³/49m	17m³/41m	25m³/22m	496	
6	6SP17-07	4	5.5	9.6	10m³/68m	17m³/58m	25m³/30m	586	
7	6SP17-09	5.5	7.5	13.5	10m³/88m	17m³/74m	25m³/38m	676	
8	6SP17-10	5.5	7.5	13.5	10m³/100m	17m³/80m	25m³/43m	721	
9	6SP17-12	7.5	10	18.5	10m³/117m	17m³/99m	25m³/51m	811	
10	6SP17-13	7.5	10	18.5	10m³/130m	17m³/104m	25m³/56m	856	
11	6SP17-15	9.2	12.5	22	10m³/146m	17m³/124m	25m³/64m	946	
12	6SP17-17	9.2	12.5	22	10m³/170m	17m³/136m	25m³/73m	1036	
13	6SP17-18	11	15	24.8	10m³/175m	17m³/148m	25m³/76m	1081	
14	6SP17-20	11	15	24.8	10m³/200m	17m³/160m	25m³/86m	1171	
15	6SP17-21	13	18	28.6	10m³/205m	17m³/173m	25m³/89m	1216	
16	6SP17-24	15	20	35	10m³/234m	17m³/198m	25m³/102m	1351	
17	6SP17-25	15	20	35	10m³/250m	17m³/200m	25m³/107m	1396	
18	6SP17-28	18.5	25	43	10m³/280m	17m³/224m	25m³/120m	1531	
19	6SP17-30	18.5	25	43	10m³/292m	17m³/247m	25m³/127m	1621	
20	6SP17-34	22	30	51.2	10m³/340m	17m³/272m	25m³/146m	1801	
21	6SP17-36	22	30	51.2	10m³/351m	17m³/297m	25m³/153m	1891	
22	6SP17-43	26	35	58.6	10m³/419m	17m³/355m	25m³/183m	2206	
23	6SP30-01	1.1	1.5	3.2	20m³/10m	30m³/8m	40m³/3.6m	327.5	76mm 3"
24	6SP30-02	2.2	3	5.8	20m³/20m	30m³/16m	40m³/7.2m	384	
25	6SP30-03	3	4	8	20m³/28m	30m³/22m	40m³/10.8m	440.5	
26	6SP30-04	4	5.5	9.6	20m³/40m	30m³/32m	40m³/14.4m	497	
27	6SP30-05	5.5	7.5	13.5	20m³/53m	30m³/39m	40m³/18m	553.5	
28	6SP30-07	7.5	10	18.5	20m³/74m	30m³/55m	40m³/25m	666.5	
29	6SP30-09	9.2	12.5	22	20m³/95m	30m³/71m	40m³/32m	779.5	
30	6SP30-10	9.2	12.5	22	20m³/105m	30m³/80m	40m³/36m	836	
31	6SP30-12	11	15	24.8	20m³/126m	30m³/94m	40m³/42m	949	
32	6SP30-13	11	15	24.8	20m³/137m	30m³/104m	40m³/45m	1005.5	
33	6SP30-14	13	17.5	28.6	20m³/148m	30m³/110m	40m³/50m	1062	
34	6SP30-16	15	20	35	20m³/169m	30m³/126m	40m³/57m	1175	
35	6SP30-17	15	20	35	20m³/180m	30m³/136m	40m³/61m	1231.5	
36	6SP30-19	18.5	25	43	20m³/201m	30m³/150m	40m³/68m	1344.5	
37	6SP30-21	18.5	25	43	20m³/222m	30m³/168m	40m³/76m	1447.5	
38	6SP30-23	22	30	51.2	20m³/243m	30m³/181m	40m³/82m	1570.5	
39	6SP30-24	22	30	51.2	20m³/253m	30m³/192m	40m³/86m	1627	
40	6SP30-28	26	35	58.6	20m³/296m	30m³/221m	40m³/100m	1853	
41	6SP30-30	26	35	58.6	20m³/317m	30m³/240m	40m³/108m	1966	
42	6SP30-33	30	40	68.5	20m³/348m	30m³/264m	40m³/118m	2135.5	
43	6SP30-35	30	40	68.5	20m³/370m	30m³/280m	40m³/126m	2248.5	
44	6SP30-39	37	45	79.8	20m³/412m	30m³/312m	40m³/140m	2474.5	

Series-6SP (Stainlesss Steel Pump)

No.	Model	Motor Power		Current (Three-Phase)	Flow/Lift			Total Length	Outlet Diameter
		KW	HP	A					
45	6SP46-01	1.5	2.2	5.8	35m³/10m	46m³/9m	55m³/7m	383.8	76mm 3″
46	6SP46-02	3	4	8	35m³/20m	46m³/18m	55m³/14m	496.6	
47	6SP46-03	5.5	7.5	13.5	35m³/30m	46m³/27m	55m³/21m	609.4	
48	6SP46-04	7.5	10	18.5	35m³/40m	46m³/35m	55m³/28m	723.2	
49	6SP46-05	7.5	10	18.5	35m³/50m	46m³/44m	55m³/35m	836	
50	6SP46-06	9.2	12.5	22	35m³/60m	46m³/53m	55m³/42m	948.8	
51	6SP46-07	11	15	24.8	35m³/70m	46m³/62m	55m³/49m	1061.6	
52	6SP46-08	13	17.5	28.6	35m³/80m	46m³/70m	55m³/56m	1174.4	
53	6SP46-09	15	20	35	35m³/90m	46m³/81m	55m³/63m	1287.2	
54	6SP46-10	15	20	35	35m³/100m	46m³/88m	55m³/70m	1400	
55	6SP46-11	18.5	25	43	35m³/110m	46m³/99m	55m³/77m	1512.8	
56	6SP46-12	18.5	25	43	35m³/120m	46m³/106m	55m³/84m	1625.6	
57	6SP46-13	22	30	51.2	35m³/130m	46m³/115m	55m³/91m	1738.4	
58	6SP46-14	22	30	51.2	35m³/140m	46m³/123m	55m³/98m	1851.2	
59	6SP46-15	22	30	51.2	35m³/150m	46m³/132m	55m³/105m	1964	
60	6SP46-16	26	35	58.6	35m³/160m	46m³/141m	55m³/112m	2076.8	
61	6SP46-17	26	35	58.6	35m³/170m	46m³/150m	55m³/119m	2189.6	
62	6SP46-18	30	40	65.5	35m³/180m	46m³/158m	55m³/126m	2302.4	
63	6SP46-19	30	40	65.5	35m³/190m	46m³/171m	55m³/133m	2415.2	
64	6SP46-20	30	40	65.5	35m³/200m	46m³/180m	55m³/140m	2528	
65	6SP46-21	37	50	79.8	35m³/210m	46m³/186m	55m³/147m	2640.8	
66	6SP46-22	37	50	79.8	35m³/220m	46m³/192m	55m³/154m	2753.6	
67	6SP60-01	2.2	3	5.8	50m³/9m	60m³/8m	65m³/7m	383.8	76mm 3″
68	6SP60-02	4	5.5	9.6	50m³/18m	60m³/16m	65m³/14m	496.6	
69	6SP60-03	5.5	7.5	13.5	50m³/27m	60m³/24m	65m³/21m	609.4	
70	6SP60-04	7.5	10	18.5	50m³/36m	60m³/31m	65m³/28m	722.2	
71	6SP60-05	9.2	12.5	22	50m³/45m	60m³/39m	65m³/34m	835	
72	6SP60-06	11	15	24.8	50m³/54m	60m³/46m	65m³/41m	947.8	
73	6SP60-07	13	17.5	28.6	50m³/63m	60m³/55m	65m³/49m	1060.6	
74	6SP60-08	15	20	35	50m³/72m	60m³/62m	65m³/55m	1173.4	
75	6SP60-09	18.5	25	43	50m³/81m	60m³/70m	65m³/62m	1286.2	
76	6SP60-10	18.5	25	43	50m³/90m	60m³/78m	65m³/69m	1399	
77	6SP60-11	22	30	51.2	50m³/100m	60m³/86m	65m³/76m	1511.8	
78	6SP60-12	22	30	51.2	50m³/110m	60m³/94m	65m³/83m	1624.6	
79	6SP60-13	26	35	58.6	50m³/118m	60m³/102m	65m³/90m	1737.4	
80	6SP60-14	26	35	58.6	50m³/128m	60m³/110m	65m³/97m	1850.2	
81	6SP60-15	26	35	58.6	50m³/135m	60m³/117m	65m³/104m	1963	
82	6SP60-16	30	40	65.5	50m³/144m	60m³/124m	65m³/111m	2075.8	
83	6SP60-17	30	40	65.5	50m³/153m	60m³/132m	65m³/118m	2188.6	
84	6SP60-18	30	40	65.5	50m³/162m	60m³/140m	65m³/125m	2301.4	
85	6SP60-19	37	50	79.8	50m³/171m	60m³/148m	65m³/132m	2414.2	
86	6SP60-20	37	50	79.8	50m³/180m	60m³/157m	65m³/139m	2527	
87	6SP60-21	37	50	79.8	50m³/189m	60m³/164m	65m³/146m	2639.8	

FOUNTAIN PUMP (REGULAR VERSION)

Series-8SP (Stainlesss Steel Pump)

No.	Model	Motor Power		Current (Three-Phase)	Flow/Lift			Total Length	Outlet Diameter
		KW	HP	A					
1	8SP77-01	5.5	7.5	13	60m³/15m	77m³/13m	90m³/10m	414	127mm 5″
2	8SP77-02	7.5	10	18	60m³/30m	77m³/27m	90m³/21m	518	
3	8SP77-03	11	15	24.8	60m³/44m	77m³/40m	90m³/31m	622	
4	8SP77-04	15	20	35	60m³/59m	77m³/53m	90m³/42m	726	
5	8SP77-05	18.5	25	43	60m³/74m	77m³/67m	90m³/52m	830	
6	8SP77-06	22	30	51.2	60m³/89m	77m³/80m	90m³/63m	934	
7	8SP77-07	26	35	58.6	60m³/104m	77m³/93m	90m³/73m	1038	
8	8SP77-08	30	40	65.5	60m³/119m	77m³/107m	90m³/84m	1142	
9	8SP77-10	37	50	79.8	60m³/148m	77m³/133m	90m³/105m	1350	
10	8SP77-12	45	60	97	60m³/178m	77m³/160m	90m³/126m	1558	
11	8SP77-15	55	75	116	60m³/222m	77m³/200m	90m³/157m	1870	
12	8SP77-17	63	85	132	60m³/252m	77m³/227m	90m³/178m	2078	
13	8SP77-20	75	100	155	60m³/297m	77m³/267m	90m³/210m	2390	
14	8SP95-01	5.5	7.5	13	80m³/14m	95m³/12m	110m³/9m	414	127mm 5″
15	8SP95-02	9.2	12.5	21.8	80m³/28m	95m³/24m	110m³/18m	518	
16	8SP95-03	13	17.5	29.8	80m³/41m	95m³/36m	110m³/28m	622	
17	8SP95-04	18.5	25	43	80m³/55m	95m³/48m	110m³/37m	726	
18	8SP95-05	22	30	51.2	80m³/69m	95m³/60m	110m³/46m	830	
19	8SP95-06	26	35	58.6	80m³/83m	95m³/72m	110m³/55m	934	
20	8SP95-07	30	40	65.5	80m³/97m	95m³/84m	110m³/64m	1038	
21	8SP95-09	37	50	79.8	80m³/124m	95m³/108m	110m³/83m	1246	
22	8SP95-11	45	60	97	80m³/152m	95m³/132m	110m³/101m	1454	
23	8SP95-13	55	75	116	80m³/179m	95m³/156m	110m³/120m	1662	
24	8SP95-15	63	85	132	80m³/207m	95m³/180m	110m³/138m	1870	
25	8SP95-17	75	100	155	80m³/234m	95m³/204m	110m³/156m	2078	
26	8SP95-20	90	125	186	80m³/276m	95m³/240m	110m³/184m	2390	

Series-10SP (Stainlesss Steel Pump)

No.	Model	Motor Power		Current (Three-Phase)	Flow/Lift			Total Length	Outlet Diameter
		KW	HP	A					
1	10SP125-01	11	15	24.8	100m³/22m	125m³/21m	140m³/17m	616	150mm 6″
2	10SP125-02	22	30	51.2	100m³/44m	125m³/42m	140m³/34m	772	
3	10SP125-03	30	40	79.8	100m³/66m	125m³/63m	140m³/51m	928	
4	10SP125-04	37	50	97	100m³/88m	125m³/84m	140m³/68m	1084	
5	10SP125-05	45	60	116	100m³/110m	125m³/105m	140m³/85m	1240	
6	10SP125-06	55	75	132	100m³/132m	125m³/126m	140m³/102m	1396	
7	10SP125-07	63	83	155	100m³/154m	125m³/147m	140m³/119m	1552	
8	10SP125-08	75	100	186	100m³/176m	125m³/168m	140m³/136m	1708	
9	10SP125-09	90	125	218	100m³/198m	125m³/189m	140m³/153m	1864	
10	10SP125-10	110	150	218	100m³/220m	125m³/210m	140m³/170m	2020	
11	10SP160-01	13	17.5	29.8	120m³/23m	160m³/20m	180m³/18m	616	150mm 6″
12	10SP160-02	26	37	58.6	120m³/46m	160m³/40m	180m³/36m	772	
13	10SP160-03	37	50	79.8	120m³/69m	160m³/60m	180m³/54m	928	
14	10SP160-04	55	75	116	120m³/92m	160m³/80m	180m³/72m	1084	
15	10SP160-05	63	85	132	120m³/115m	160m³/100m	180m³/90m	1240	
16	10SP160-06	75	100	155	120m³/138m	160m³/120m	180m³/108m	1396	
17	10SP160-07	90	125	186	120m³/161m	160m³/140m	180m³/126m	1552	
18	10SP160-08	90	125	218	120m³/184m	160m³/160m	180m³/144m	1708	
19	10SP160-09	110	150	218	120m³/1207m	160m³/180m	180m³/162m	1864	

WATER SCREEN DEVICE

Equipment Exhibition

WATER SCREEN

WATER SCREEN DEVICE

Parameters

No.	Items	Water Screen Device			
01	Material	SS304			
02	Model	DN100	DN150	DN100 (Baffle Style)	DN150 (Baffle Style)
03	Size	Φ255*180	Φ305*200	380*340*160	420*380*240
04	Weight	16.3KG	33KG	24KG	36.8KG
05	Scattering Angle	165°	165°	180°	180°
06	Scattering Radius	15m	20m	15m	20m

Application

2W RGB ANIMATION LASER

Parameters

Name	2W RGB Animation Laser
Model	CC-RGB-2W
Power/Wavelength	R: 450mw/638nm G: 450mw/520nm B: 1200mw/455nm
Divergence	< 1.1 mrad
Control Mode	ILDA, DMX512, SOUND, AUTO
Laser Source	Semiconductor Diode
Modulation Mode	Analog Modulation 100Khz
Modulation Frequency	100K
Scanner System	20KPPS
Voltage	AC 100-240V, 50/60HZ
Equipment Power	50W
Cooling Way	Fan Cooling
Working Temperature	-10℃-45℃
Size	220(L)*170(W)*130(H) mm
Weight	3.7KG
Package Size	315(L)*305(W)*210(H) mm
Package Weight	4.7KG

Equipment Exhibition

Application

3W RGB ANIMATION LASER

Parameters

Name	3W RGB Animation Laser
Model	CC-RGB-3W
Power/Wavelength	R: 550mw/638nm G: 850mw/520nm B: 1650mw/455nm
Divergence	< 1.1 mrad
Control Mode	ILDA, DMX512, SOUND, AUTO
Laser Source	Semiconductor Diode
Modulation Mode	Analog Modulation
Modulation Frequency	100Khz
Scanner System	20KPPS
Voltage	AC 100-240V, 50/60HZ
Equipment Power	60W
Cooling Way	Fan Cooling
Working Temperature	-10℃-45℃
Size	220(L)*170(W)*130(H) mm
Weight	3.85KG
Package Size	315(L)*305(W)*210(H) mm
Package Weight	4.7KG

Equipment Exhibition

Application

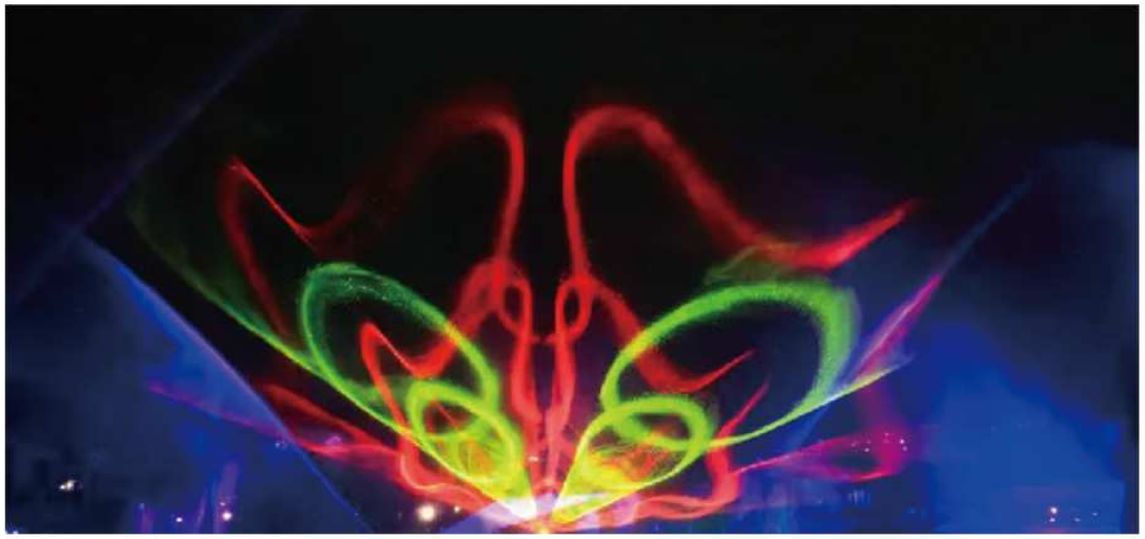

6W RGB ANIMATION LASER

Parameters

Name	6W RGB Animation Laser
Model	CC-RGB-6W
Power/Wavelength	R: 1500mw/638nm G: 1500mw/520nm B: 3000mw/455nm
Divergence	<1.1 mrad
Control Mode	ILDA, DMX512, SOUND, AUTO
Laser Source	Semiconductor Diode
Modulation Mode	Analog Modulation
Modulation Frequency	100Khz
Scanner System	35KPPS
Voltage	AC 100-240V, 50/60HZ
Equipment Power	165W
Cooling Way	Fan Cooling + TEC
Working Temperature	-10℃-45℃
Size	242(L)*220(W)*158(H) mm
Weight	8.2KG
Package Size	360(L)*360(W)*240(H) mm
Package Weight	9.2KG

Equipment Exhibition

Application

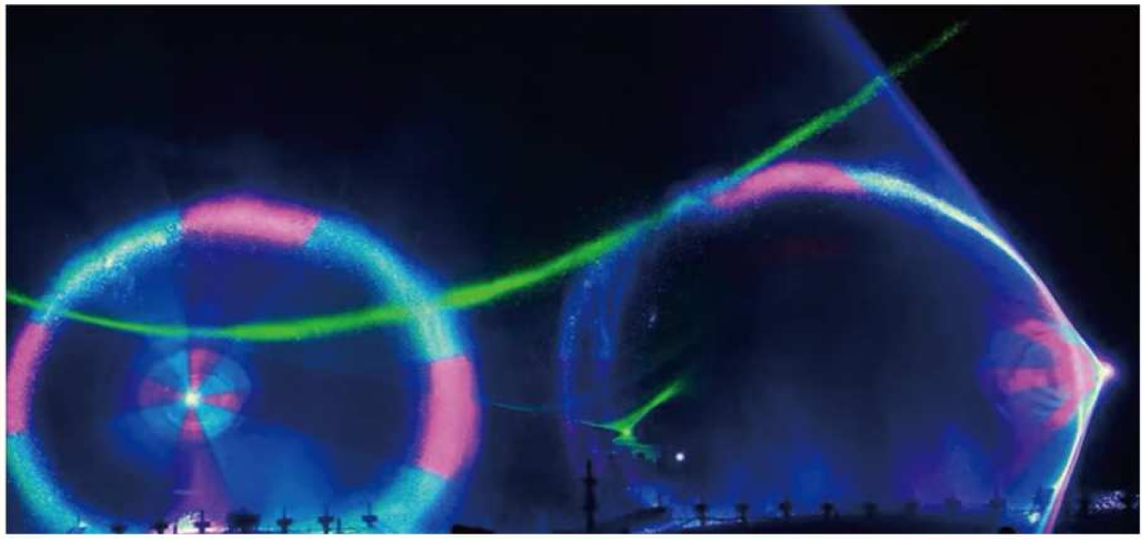

10W RGB ANIMATION LASER

Parameters

Name	10W RGB Animation Laser
Model	CC-RGB-10W
Power/Wavelength	R: 3000mw/638nm G: 3500mw/520nm B: 3500mw/455nm
Divergence	<1.1 mrad
Control Mode	ILDA, DMX512, SOUND, AUTO
Laser Source	Semiconductor Diode
Modulation Mode	Analog Modulation
Modulation Frequency	100Khz
Scanner System	35KPPS
Voltage	AC 100-240V, 50/60HZ
Equipment Power	240W
Cooling Way	Fan Cooling + TEC
Working Temperature	-10℃-45℃
Size	242(L)*220(W)*158(H) mm
Weight	8.7KG
Package Size	360(L)*360(W)*240(H) mm
Package Weight	9.7KG

Equipment Exhibition

Application

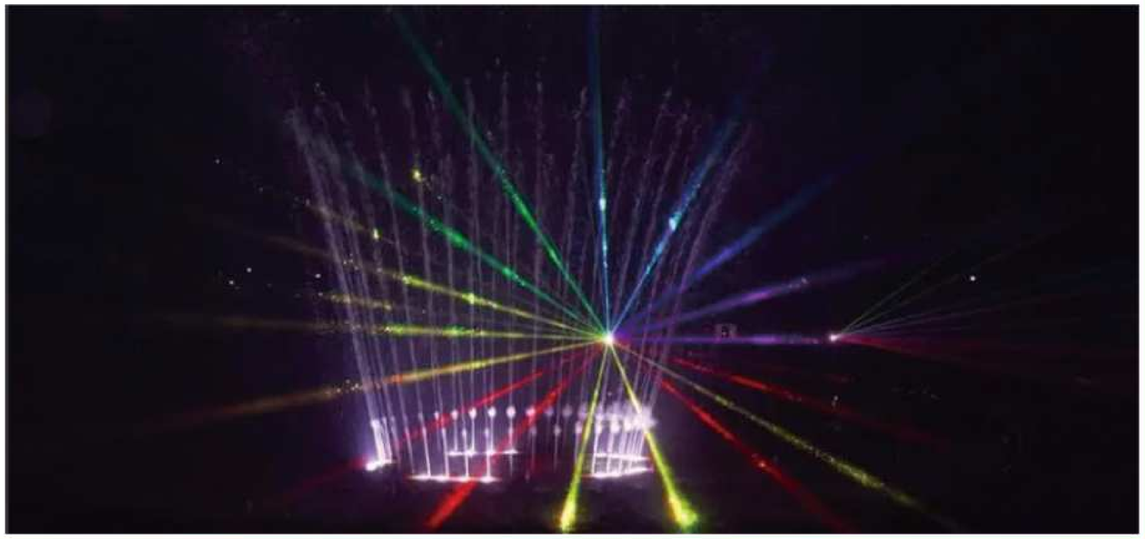

20W RGB ANIMATION LASER

Parameters

Name	20W RGB Animation Laser
Model	CC-RGB-20W
Power/Wavelength	R: 5500mw/638nm G: 7000mw/520nm B: 8500mw/455nm
Divergence	< 1.3 mrad
Control Mode	ILDA, DMX512, SOUND, AUTO
Laser Source	Semiconductor Diode
Modulation Mode	Analog Modulation
Modulation Frequency	100Khz
Scanner System	DT50BB 50KPPS ±30°
Voltage	AC 100-240V, 50/60HZ
Equipment Power	< 320W
Cooling Way	Fan Cooling + TEC
Working Temperature	-10℃-45℃
Size	435(L)*320(W)*252(H) mm
Weight	30KG

Equipment Exhibition

Application

30W RGB ANIMATION LASER

Parameters

Name	30W RGB Animation Laser
Model	CC-RGB-30W
Power/Wavelength	R: 8000mw/638nm G: 9000mw/520nm B: 1300mw/455nm
Divergence	< 1.3 mrad
Control Mode	ILDA, DMX512, SOUND, AUTO
Laser Source	Semiconductor Diode
Modulation Mode	Analog Modulation
Modulation Frequency	100Khz
Scanner System	DT50BB 50KPPS ±30°
Voltage	AC 100-240V, 50/60HZ
Equipment Power	< 480W
Cooling Way	Fan Cooling + TEC
Working Temperature	-10℃-45℃
Size	435(L)*320(W)*250(H) mm
Weight	35KG

Equipment Exhibition

Application

3W GREEN LASER

Parameters

Name	3W Green Laser
Model	CC-G-3W
Power/Wavelength	G: 3000mw/520nm
Divergence	ca.5mm < 1.3 mrad
Control Mode	ILDA, DMX512, SOUND, AUTO
Laser Source	Semiconductor Diode
Modulation Mode	Analog Modulation
Modulation Frequency	100Khz
Scanner System	20KPPS
Voltage	AC 100-240V, 50/60HZ
Equipment Power	55W
Cooling Way	Fan Cooling
Working Temperature	-10℃-45℃
Size	219(L)*170(W)*130(H) mm
Weight	3.8KG

Equipment Exhibition

Application

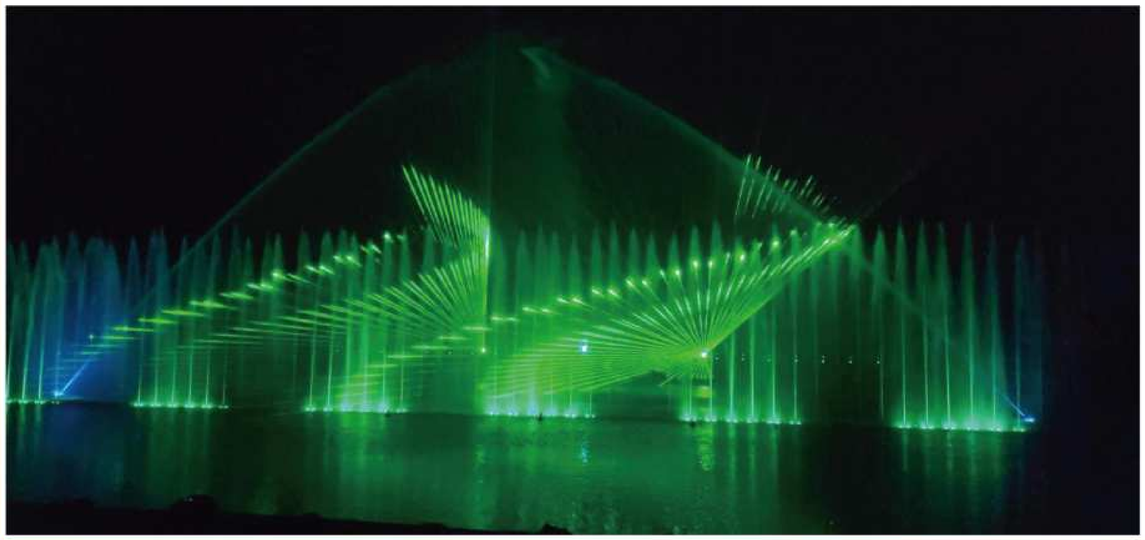

5W GREEN LASER

Parameters

Name	5W Green Laser
Model	CC-G-5W
Power/Wavelength	G: 5000mw/520nm
Divergence	ca.5mm < 1.3 mrad
Control Mode	ILDA, DMX512, SOUND, AUTO
Laser Source	Semiconductor Diode
Modulation Mode	Analog Modulation
Modulation Frequency	100Khz
Scanner System	35KPPS
Voltage	AC 100-240V, 50/60HZ
Equipment Power	60W
Cooling Way	Fan Cooling
Working Temperature	-10℃-45℃
Size	242(L)*220(W)*180(H) mm
Weight	3.8KG

Equipment Exhibition

Application

10W GREEN LASER

Parameters

Name	10W Green Laser
Model	CC-G-10W
Power/Wavelength	G: 10000mw/520nm
Divergence	ca.5mm < 1.3 mrad
Control Mode	ILDA, DMX512, SOUND, AUTO
Laser Source	Semiconductor Diode
Modulation Mode	Analog Modulation
Modulation Frequency	100Khz
Scanner System	35KPPS
Voltage	AC 100-240V, 50/60HZ
Equipment Power	60W
Cooling Way	Fan Cooling
Working Temperature	-10℃-45℃
Size	242(L)*220(W)*180(H) mm
Weight	3.8KG

Equipment Exhibition

Application

20W GREEN LASER

Parameters

Name	20W Green Laser
Model	CC-G-20W
Power/Wavelength	G: 20000mw/520nm
Divergence	ca.6.5mm < 1.3 mrad
Control Mode	ILDA, DMX512, SOUND, AUTO
Laser Source	Semiconductor Diode
Modulation Mode	Analog Modulation
Modulation Frequency	100Khz
Scanner System	50KPPS
Voltage	AC 100-240V, 50/60HZ
Equipment Power	320W
Cooling Way	Fan Cooling + TEC
Working Temperature	-10℃-45℃
Size	435(L)*320(W)*250(H) mm
Weight	30KG

Equipment Exhibition

Application

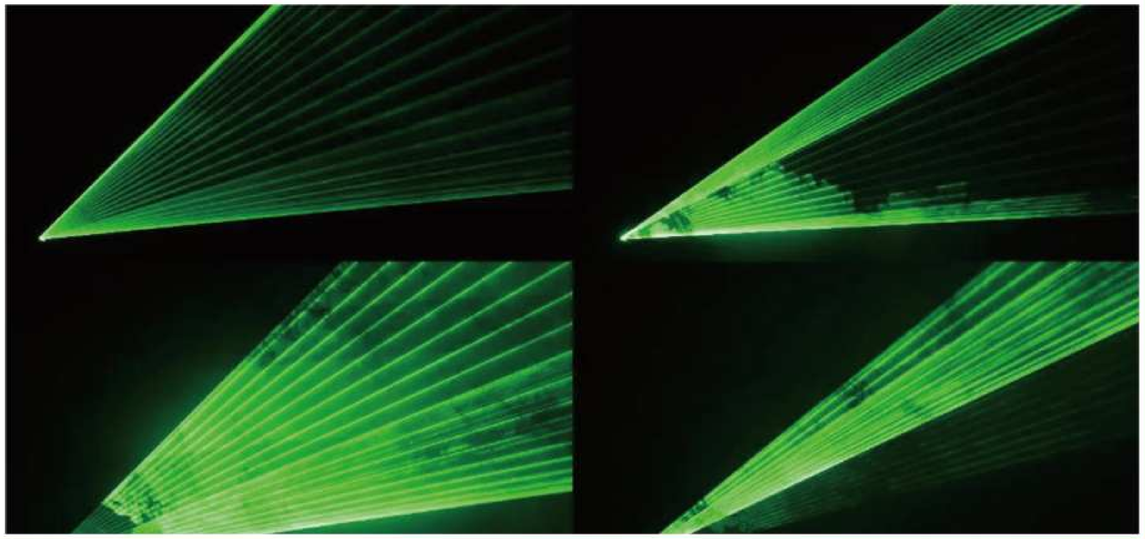

30W GREEN LASER

Parameters

Name	30W Green Laser
Model	CC-G-30W
Power/Wavelength	G: 30000mw/520nm
Divergence	ca.8mm < 1.3 mrad
Control Mode	ILDA, DMX512, SOUND, AUTO
Laser Source	Semiconductor Diode
Modulation Mode	Analog Modulation
Modulation Frequency	100Khz
Scanner System	50KPPS
Voltage	AC 100-240V, 50/60HZ
Equipment Power	480W
Cooling Way	Fan Cooling + TEC
Working Temperature	-10℃-45℃
Size	435(L)*320(W)*250(H) mm
Weight	35KG

Equipment Exhibition

Application

HX580 SERIES

Equipment Exhibition

Parameters

Power	Voltage	Pump Flow	Pressure	Speed	Case Size (cm)
0.55KW	AC 380V	2L/min	70 bar	1450r/min	580*350*650
0.55KW	AC 220V	2L/min	70 bar	1450r/min	580*350*650
0.55KW	AC 380V	4L/min	70 bar	1450r/min	580*350*650
0.55KW	AC 220V	4L/min	70 bar	1450r/min	580*350*650
0.75KW	AC 380V	4L/min	70 bar	1450r/min	580*350*650
0.75KW	AC 220V	4L/min	70 bar	1450r/min	580*350*650
0.55KW	AC 380V	4L/min	70 bar	960r/min	580*350*650

HX650 SERIES

Equipment Exhibition

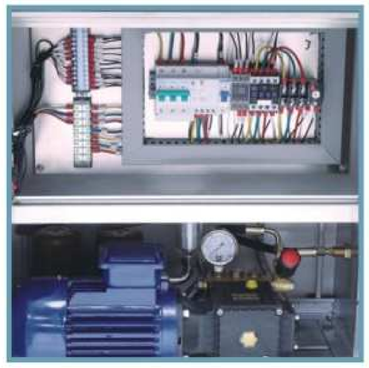

Parameters

Power	Voltage	Pump Flow	Pressure	Speed	Case Size (cm)
1.1KW	AC 380V	6L/min	70 bar	1450r/min	650*450*780
1.1KW	AC 220V	6L/min	70 bar	1450r/min	650*450*780
1.5KW	AC 380V	8L/min	70 bar	1450r/min	650*450*780
1.5KW	AC 220V	8L/min	70 bar	1450r/min	650*450*780
2.2KW	AC 380V	12L/min	70 bar	1450r/min	650*450*780
2.2KW	AC 220V	12L/min	70 bar	1450r/min	650*450*780
3.0KW	AC 380V	15L/min	70 bar	1450r/min	650*450*780
3.0KW	AC 220V	15L/min	70 bar	1450r/min	650*450*780
3.0KW	AC 380V	18L/min	70 bar	1450r/min	650*450*780
3.0KW	AC 380V	20L/min	70 bar	1450r/min	650*450*780
0.75KW	AC 380V	4L/min	70 bar	960r/min	650*450*780
0.75KW	AC 380V	8L/min	70 bar	960r/min	650*450*780
1.5KW	AC 380V	12L/min	70 bar	960r/min	650*450*780
0.75KW	AC 380V	12L/min	70 bar	720r/min	650*450*780

HX680 SERIES

Equipment Exhibition

Parameters

Power	Voltage	Pump Flow	Pressure	Speed	Case Size (cm)
4.0KW	AC 380V	24L/min	70 bar	1450r/min	680*500*900
4.0KW	AC 380V	30L/min	70 bar	1450r/min	680*500*900
2.2KW	AC 380V	20L/min	70 bar	960r/min	680*500*900
3.0KW	AC 380V	24L/min	70 bar	960r/min	680*500*900
3.0KW	AC 380V	30L/min	70 bar	960r/min	680*500*900
1.5KW	AC 380V	15L/min	70 bar	720r/min	680*500*900

HX750 SERIES

Equipment Exhibition

Parameters

Power	Voltage	Pump Flow	Pressure	Speed	Case Size (cm)
5.5KW	AC 380V	30L/min	70 bar	1450r/min	750*620*1120
5.5KW	AC 380V	40L/min	70 bar	1450r/min	750*620*1120
3.0KW	AC 380V	30L/min	70 bar	960r/min	750*620*1120
4.0KW	AC 380V	40L/min	70 bar	960r/min	750*620*1120
5.5KW	AC 380V	50L/min	70 bar	960r/min	750*620*1120
2.2KW	AC 380V	24L/min	70 bar	720r/min	750*620*1120
3.0KW	AC 380V	30L/min	70 bar	720r/min	750*620*1120

HX850 SERIES

Equipment Exhibition

Parameters

Power	Voltage	Pump Flow	Pressure	Speed	Case Size (cm)
5.5KW	AC 380V	30L/min	70 bar	1450r/min	950*600*1120
5.5KW	AC 380V	40L/min	70 bar	1450r/min	950*600*1120
4.0KW	AC 380V	40L/min	70 bar	960r/min	950*600*1120
5.5KW	AC 380V	50L/min	70 bar	960r/min	950*600*1120

COLD MIST HOST

HX950 SERIES

Equipment Exhibition

Parameters

Power	Voltage	Pump Flow	Pressure	Speed	Case Size (cm)
5.5KW	AC 380V	30L/min	70 bar	1450r/min	950*620*1140
5.5KW	AC 380V	40L/min	70 bar	1450r/min	950*620*1140
7.5KW	AC 380V	50L/min	70 bar	1450r/min	950*620*1140
11.0KW	AC 380V	70L/min	70 bar	1450r/min	950*620*1140
4.0KW	AC 380V	40L/min	70 bar	960r/min	950*620*1140
5.5KW	AC 380V	50L/min	70 bar	960r/min	950*620*1140
4.0KW	AC 380V	40L/min	70 bar	720r/min	950*620*1140

HX700 SERIES

Equipment Exhibition

COLD MIST HOST

HX700 SERIES

Parameters

Power	Voltage	Pump Flow	Pressure	Speed	Case Size (cm)
4.0KW	AC 380V	24L/min	70 bar	1450r/min	600*500*900
4.0KW	AC 380V	30L/min	70 bar	1450r/min	600*500*900
2.2KW	AC 380V	20L/min	70 bar	960r/min	600*500*900
3.0KW	AC 380V	24L/min	70 bar	960r/min	600*500*900
3.0KW	AC 380V	30L/min	70 bar	960r/min	600*500*900
1.5KW	AC 380V	15L/min	70 bar	720r/min	600*500*900